theRonda S360-100 FLAT DE WH

Item no.: 2080540

Presence and motion detectors
Indoor detectors

Description

- Passive infra-red presence detector for ceiling installation
- Circular detection area 360°, up to Ø 8 m (50 m²) at mounting height 3 m
- 1 channel light (Relay, 230 V)
- Automatic motion and brightness-dependent control for lighting
- Mixed light measurement suitable for fluorescent lamps (FL/PL/ESL), halogen/incandescent lamps and LEDs
- Operation as fully automatic device
- Brightness switching value configurable, teach-in function
- Pulse function for staircase light time switch
- Time delay configurable
- Detection sensitivity configurable
- Test mode for checking function and detection area
- Ready for immediate use due to factory presetting (Brightness switching value 300 lux, Time delay 10 min.)
- One of these optional remote controls is required for changing the values and attitudes:
- Management remote control SendoPro
- Installation remote control theSenda P
- Optional user remote control: theSenda S

theRonda S360-100 FLAT DE WH

Item no.: 2080540

Technical data

	theRonda S360-100 FLAT DE WH
Operating voltage	230 V AC
Frequency	50 Hz
Installation height	2 – 4 m
Minimum height	> 1,7 m
Installation type	Ceiling mounting
Colour	White
Switching output	Light
Light measurement	Mixed light measurement
Setting range brightness	30 – 3000 lx
Light switch-off delay	10 s - 60 min
Lamps	Incandescent/halogen lamps, fluorescent lamps, Energy saving lamps, LEDs

	theRonda S360-100 FLAT DE WH
Incandescent/halogen lamp load	2300 W
Inrush current	max. 400 A / 200 µs
LED lamp < 2 W	25 W
LED lamp 2-8 W	250 W
LED lamp > 8 W	250 W
Type of connection	Screw terminals
Max. cable cross section	max. 2 x 2,5 mm²
Detection range	50 m² (ø 8 m | 360°)
Ambient temperature	-15°C ... 50°C
Type of protection	IP 54 (when fitted)

Connection example

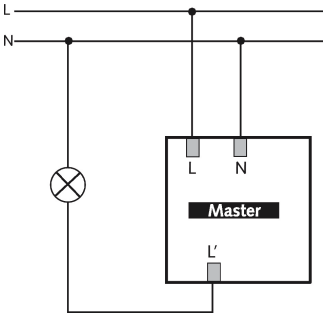

Detection range for planning applications

Mounting height (A)	Sitting (S)	Diagonally (T)	Head on to (R)
2 m	5 m² | 2.5 m	38 m² | 7 m	5 m² | 2.5 m
2.5 m	7 m² | 3 m	38 m² | 7 m	7 m² | 3 m
3 m	13 m² | 4 m	50 m² | 8 m	13 m² | 4 m
3.5 m		50 m² | 8 m	13 m² | 4 m
4 m		64 m² | 9 m	13 m² | 4 m

theRonda S360-100 FLAT DE WH

Item no.: 2080540

Detection range for planning applications

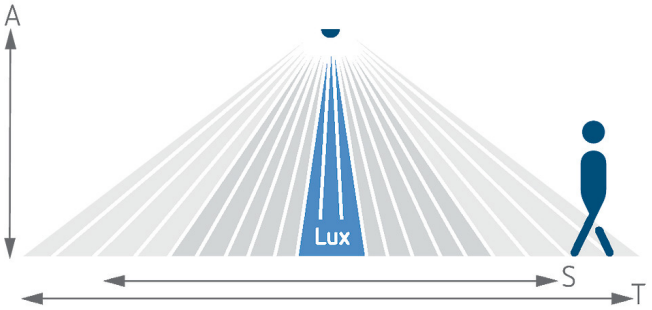

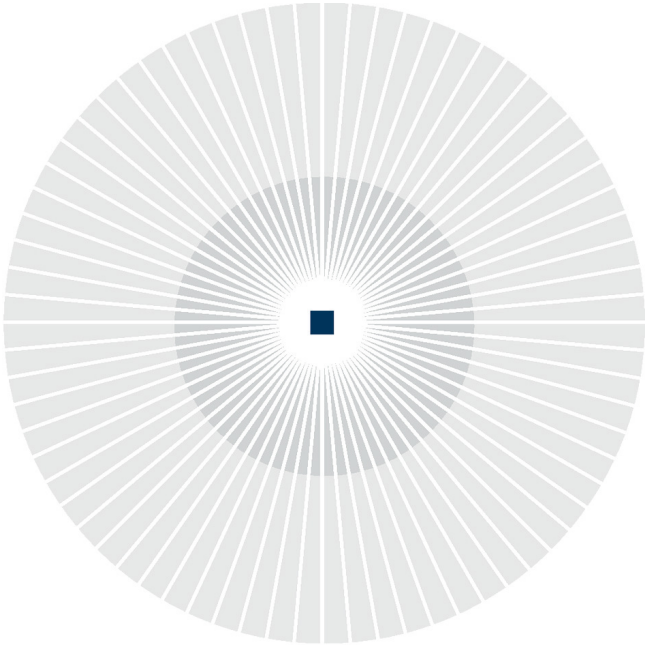

Detection range according to Sensnorm IEC 63180

Mounting height (A)	Diagonally (T)	Head on to (R)	Sitting (S)
2.5 m	39 m² | 7 m	28 m² | 6 m	24 m² | 5.5 m
4 m	85 m² | 10.4 m	79 m² | 10 m	

Scale drawings

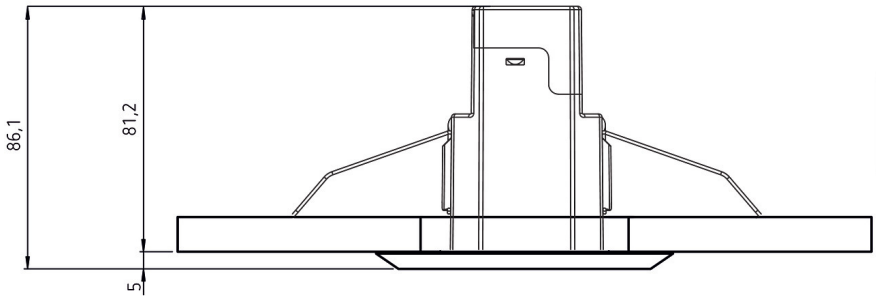

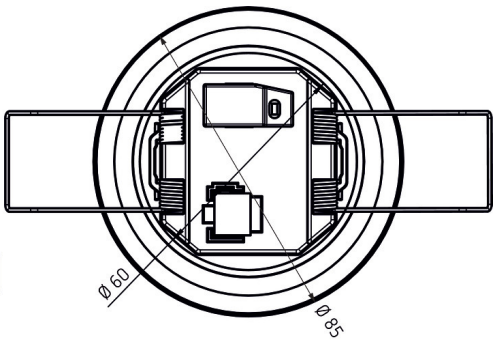

theRonda S360-100 FLAT DE WH

Item no.: 2080540

Accessories

theSenda P
Item no.: 9070910

theSenda S
Item no.: 9070911

theSenda B
Item no.: 9070985

Cover FLAT 85 GR
Item no.: 9070597