theRonda P360 Slave UP WH

Item no.: 2080030

Presence and motion detectors
Indoor detectors

Description

- Passive infra-red presence detector for flush-mounted ceiling installation
- Circular detection area 360°, up to Ø 24 m (452 m²) at mounting height 3 m
- Slave version for theRonda master presence detectors
- Test mode for checking function and detection area
- Extension of detection area via Master/Slave or Master/Master switching, a maximum of 10 detectors can be switched in parallel with each other
- Ceiling installation in flush-mounted socket
- Ceiling installation also possible with surface-mounted frame
- User remote control theSenda S, management remote control SendoPro (optional)

theRonda P360 Slave UP WH

Item no.: 2080030

Technical data

	theRonda P360 Slave UP WH
Operating voltage	110 – 230 V AC
Frequency	50 – 60 Hz
Installation height	2 – 10 m
Maximum height	15 m
Minimum height	> 1,7 m
Installation type	Ceiling installation
Colour	White
Switching output	Slave
Power consumption	~0.15 W
Light measurement	Mixed light measurement

	theRonda P360 Slave UP WH
Lamps	Incandescent/halogen lamps, fluorescent lamps, Energy saving lamps, LEDs
Type of connection	Screw terminals
Max. cable cross section	max. 2 x 2,5 mm²
Size of concealed housing	Ø 55 mm (NIS, PMI)
Detection range	452 m² (ø 24 m | 360°)
Detection angle	360°
Ambient temperature	-15°C ... 50°C
Type of protection	IP 54 (when fitted)

Connection example

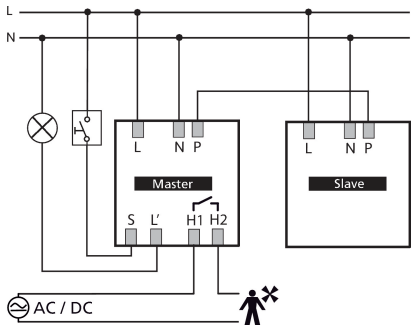

Detection range for planning applications at a temperature of 21 °C

Mounting height (A)	Sitting (S)	Diagonally (T)
2 m	16 m² | 4.5 m	380 m² | 22 m
2.5 m	24 m² | 5.5 m	415 m² | 23 m
3 m	28 m² | 6 m	452 m² | 24 m
3.5 m	38 m² | 7 m	452 m² | 24 m
6 m		452 m² | 24 m
10 m		491 m² | 25 m

Detection range for planning applications at a temperature of 21 °C

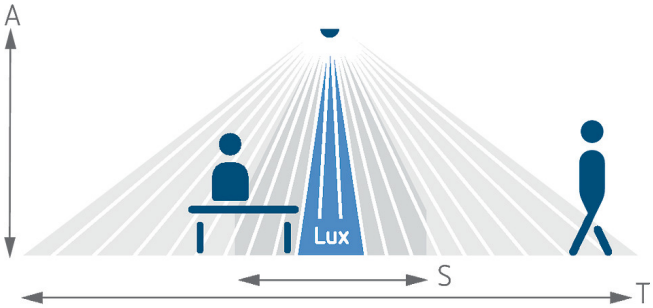

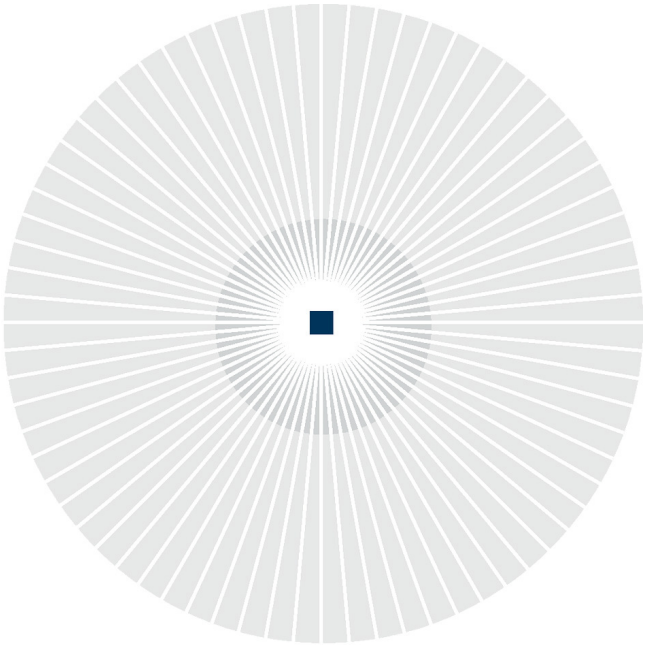

Detection range according to Sensnorm IEC 63180

Mounting height (A)	Diagonally (T)	Head on to (R)	Sitting (S)
2.5 m	434 m² | 23.5 m	55 m² | 8.4 m	50 m² | 8 m
10 m	707 m² | 30 m	79 m² | 10 m	
15 m	616 m² | 28 m	141 m² | 13.4 m	

theRonda P360 Slave UP WH

Item no.: 2080030

Scale drawings

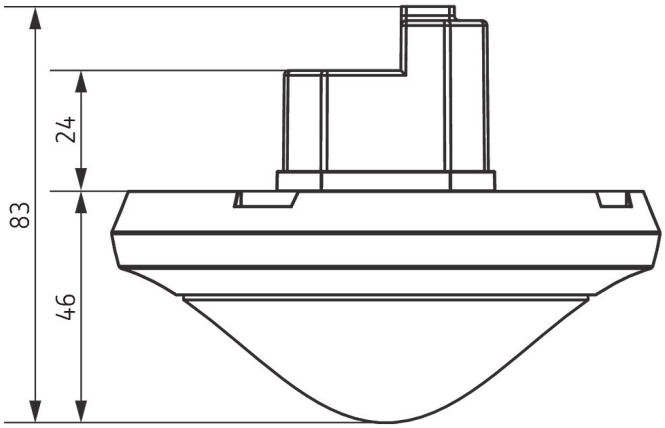

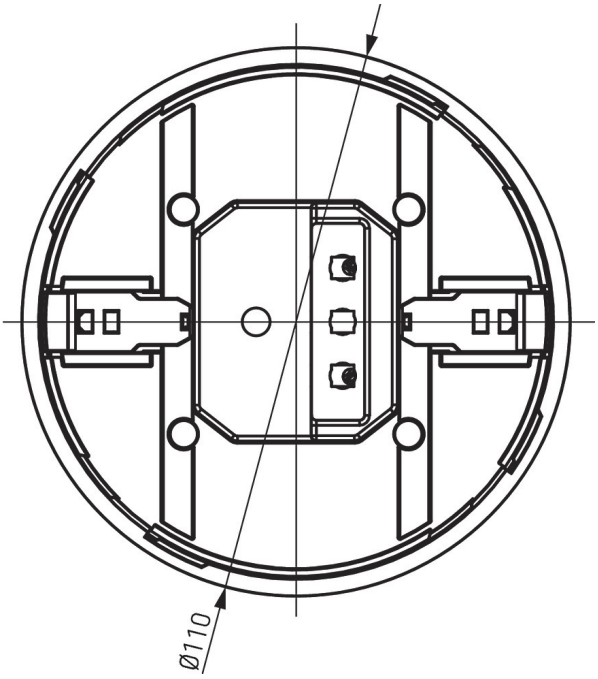

Accessories

theSenda P
Item no.: 9070910

Surface frame 110A GR
Item no.: 9070913

Ceiling installation box 73A
Item no.: 9070917

Surface frame 110A WH
Item no.: 9070912

Masking clip
Item no.: 9070921

QuickSafe
Item no.: 9070531

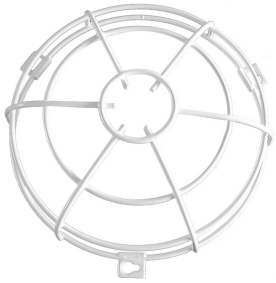

theSenda B
Item no.: 9070985

Cover 110 GR
Item no.: 9070591

Accessories

Ceiling installation box 68A
Item no.: 9070992

Surface frame 110A BK
Item no.: 9070600

Cover 110 BK
Item no.: 9070851