thePrema S360-100 E UP WH

Item no.: 2070600

Presence and motion detectors
Indoor detectors

Description

- Passive infra-red presence detector for flush-mounted ceiling installation
- Square detection area 360°, 7 x 7 m, (49 m²) at mounting height 3 m
- 1 channel light (Relay, 230 V)
- Automatic presence- and brightness-dependent control for lighting
- Mixed light measurement suitable for fluorescent lamps (FL/PL/ESL), halogen/incandescent lamps and LEDs
- Choice of fully or semi-automatic operation
- Adjustable brightness switching value, teach-in function
- Self-learning time delay
- Connection option for sensors or switches for manual switching with automatic recognition of sensor/switch
- Pulse function for staircase light time switch
- Ready for immediate use due to factory preset
- Exceptionally easy configuration of the energy-saving behaviour with the new «eco plus» function
- Test mode for checking function and detection area
- Extension of detection area via Master/Slave or Master/Master switching, a maximum of 10 detectors can be switched in parallel with each other
- Ceiling installation in flush-mounted socket
- Ceiling installation also possible with surface-mounted frame
- User remote control theSenda S, management remote control SendoPro (optional)
- * According to warranty terms and conditions, see www.theben.de/en/guarantee

5 years guarantee*

GOOD DESIGN

PLUS X AWARD honored as: BEST PRODUCT OF THE YEAR 2014

PLUS X AWARD 2014 achieved for: Innovation, High Quality, Design, Functionality

iF product design award 2014

thePrema S360-100 E UP WH

Item no.: 2070600

Technical data

	thePrema S360-100 E UP WH
Operating voltage	110 – 230 V AC ± 10 %
Frequency	50 – 60 Hz
Installation height	2 – 3.5 m
Minimum height	> 1,7 m
Installation type	Ceiling installation
Colour	White
Switching output	Light
Power consumption	~0.1 W
Light measurement	Mixed light measurement
Setting range brightness	5 – 3000 lx
Light switch-off delay	10 s – 60 min
Type of contact light	Relay 230 V/10 A µ-contact
Lamps	Incandescent/halogen lamps, fluorescent lamps, Energy saving lamps, LEDs
Incandescent/halogen lamp load	2300 W

	thePrema S360-100 E UP WH
Compact and flourescent lamps	1150 VA (cos φ = 0,5)
Inrush current	max. 800 A / 200 µs
Energy saving lamps	16 x 54/58 W, 24 x 35/36 W, 8 x 2 x 54/58 W, 12 x 2 x 35/36 W
LED lamp < 2 W	60 W
LED lamp 2-8 W	600 W
LED lamp > 8 W	600 W
Type of connection	Screw terminals
Max. cable cross section	max. 2 x 2,5 mm²
Size of concealed housing	Ø 55 mm (NIS, PMI)
Detection range	49 m² (7,0 x 7,0 m)
Ambient temperature	0°C ... 50°C
Impact resistance	IK04
Type of protection	IP 40 (when fitted)

Connection example

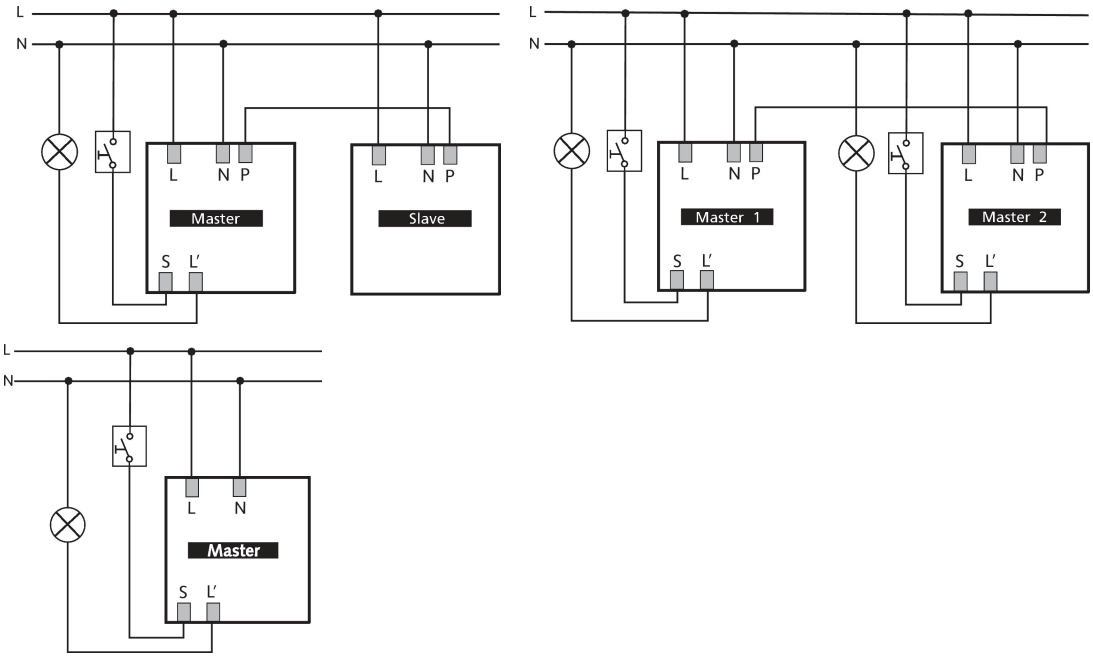

Detection range for planning applications

Mounting height (A)	Sitting (S)	Walking (T)
2 m	9 m² | 3 m x 3 m	20 m² | 4.5 m x 4.5 m ± 0.5 m
2.5 m	16 m² | 4 m x 4 m	36 m² | 6 m x 6 m ± 0.5 m
3 m	25 m² | 5 m x 5 m	49 m² | 7 m x 7 m ± 1 m
3.5 m		64 m² | 8 m x 8 m ± 1 m

thePrema S360-100 E UP WH

Item no.: 2070600

Detection range for planning applications

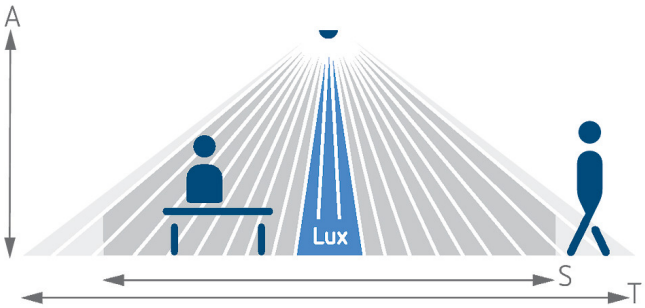

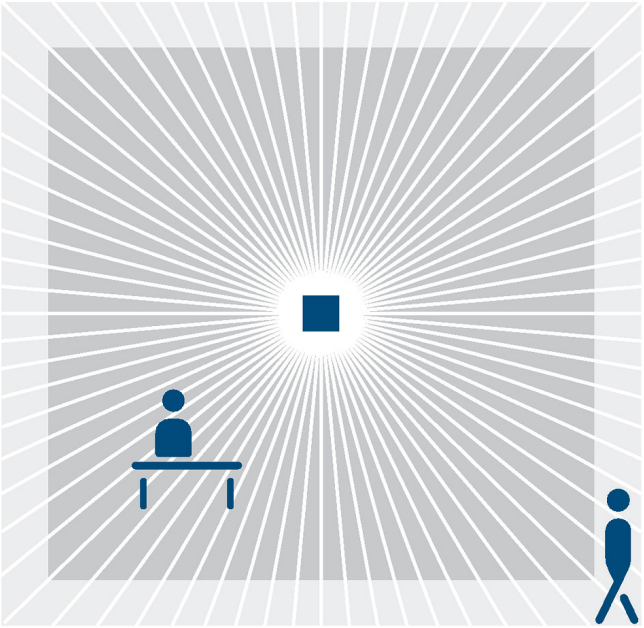

Detection range according to Sensnorm IEC 63180

Mounting height (A)	Diagonally (T)	Head on to (R)	Sitting (S)
2.5 m	40 m² | 6.3 m x 6.3 m	22 m² | 4.7 m x 4.7 m	20 m² | 4.5 m x 4.5 m

Scale drawings

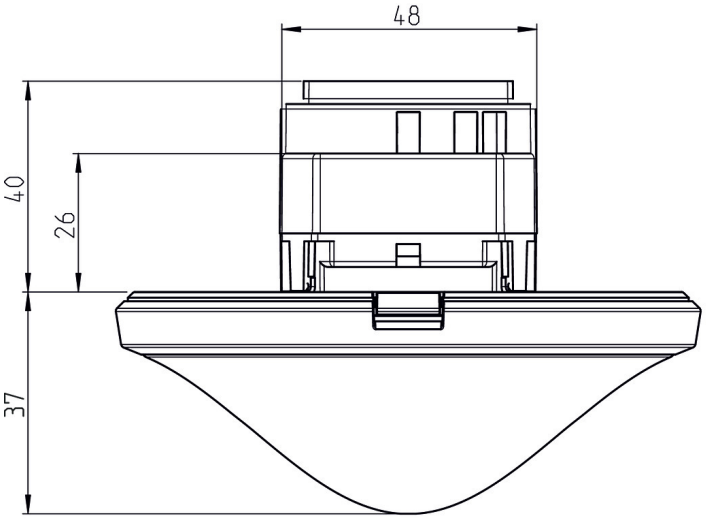

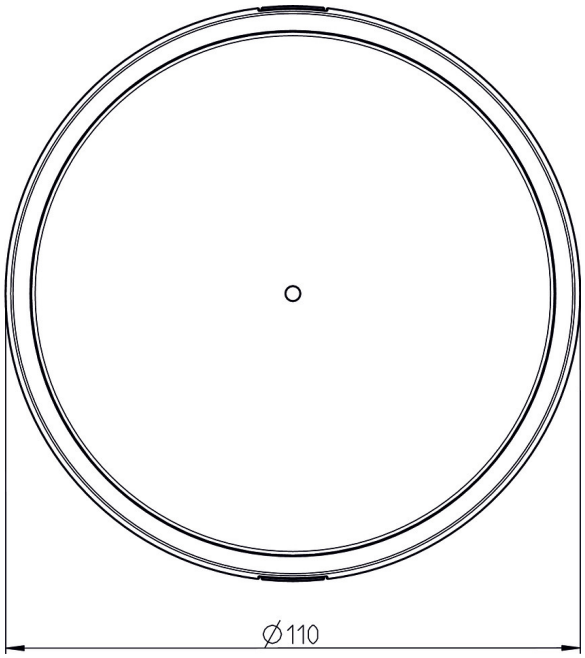

Accessories

theSenda P
Item no.: 9070910

theSenda S
Item no.: 9070911

Ceiling installation box 73A
Item no.: 9070917

Surface frame 110A WH
Item no.: 9070912

QuickSafe
Item no.: 9070531

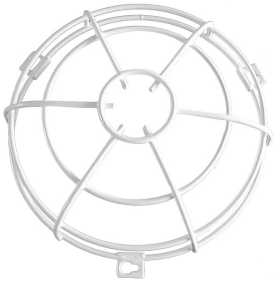

theSenda B
Item no.: 9070985

Ceiling installation box 68A
Item no.: 9070992

Surface frame 110A BK
Item no.: 9070600