theMura S180 Slave UP WH

Item no.: 2060660

Presence and motion detectors
Wall installation indoor

Description

- Passive infra-red motion/presence detector for wall installation
- Square detection area 170°, 14 x 17 m (238 m²)
- Slave version, for use in combination with theMura S180-100 UP WH, theMura S180-100 B UP, theMura S180-101 UP WH or theMura S180-101 B UP as a master
- Restriction of detection area possible
- Mixed light measurement suitable for the control of fluorescent, incandescent, halogen lamps and LEDs
- Integrated button (can be blocked)
- Product design by ID AID

Technical data

	theMura S180 Slave UP WH
Operating voltage	230 V AC
Frequency	50 - 60 Hz
Installation height	0.8 - 1.2 m
Installation type	Flush-mounted wall installation
Colour	White
Power consumption	~0.4 W
Light measurement	Mixed light measurement

	theMura S180 Slave UP WH
Lamp types	Incandescent/halogen lamps, fluorescent lamps, Energy saving lamps, LEDs
Type of connection	Spring terminals
Size of concealed housing	55 mm
Detection range	238 m² (14 x 17 m)
Detection angle	170°
Ambient temperature	-15°C ... 45°C
Type of protection	IP 20

Connection example

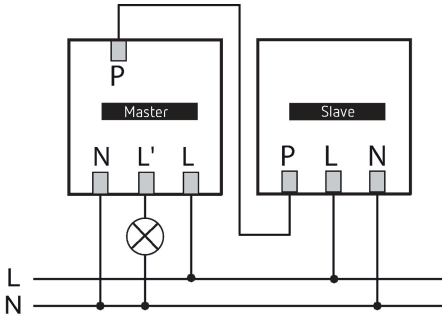

Detection range for planning applications at a temperature of 21 °C

Mounting height (A)	Head on to (R)	Diagonally (t)	Sitting (S)
1.2 m	120 m² | 12 m x 10 m	238 m² | 14 m x 17 m	

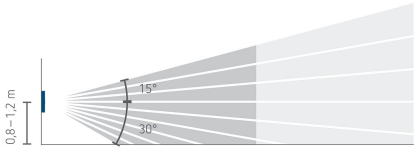

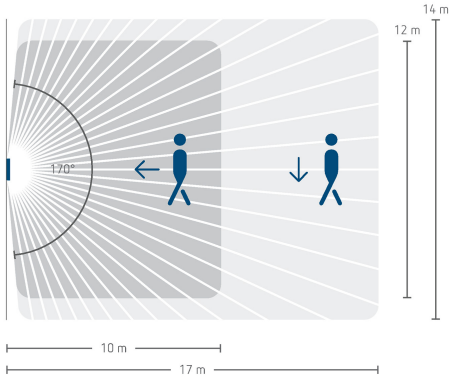

theMura S180 Slave UP WH

Item no.: 2060660

Scale drawings

theMura S180-100 UP WH (2060650) + theMura S180-101 UP WH (2060655)

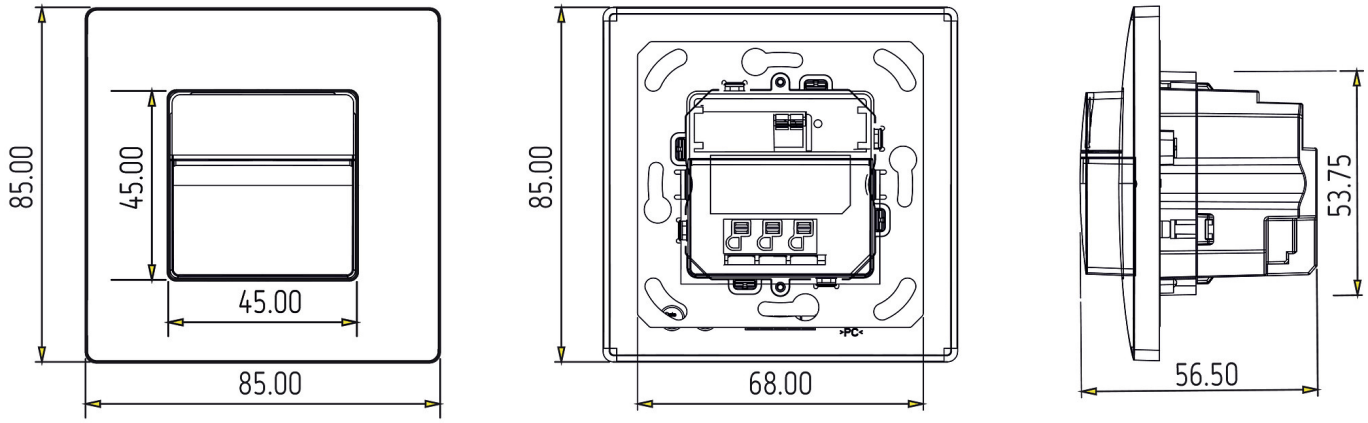

theMura S180-100 UP (2060750) + theMura S180-101 B UP (2060755)

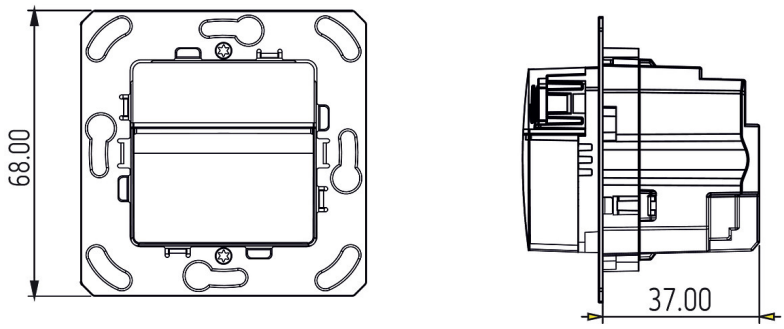

Accessories
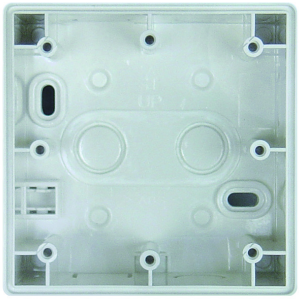
Surface frame LUXA 103-200
Item no.: 9070504