theMova S360-100 AP WH | Article number: 1030550

Description

- Passive infra-red motion detector for ceiling installation
- Circular detection area 360°, up to Ø 9 m (64 m^2)
- Automatic motion and brightness-dependent control for lighting
- Mixed light measurement
- Channel A light: relay, 230 V
- Operation as fully automatic device
- Brightness switching value configurable, teach-in function
- Pulse function for staircase light time switch
- Time delay configurable
- Detection sensitivity configurable
- Test mode for checking function and detection area
- Ready for immediate use due to factory presetting (Brightness switching value 300 lux, Time delay 10 min.)
- One of these optional remote controls is required for changing the values and attitudes:
  - Management remote control SendoPro
  - Installation remote control theSenda P
- Optional user remote control: theSenda S

Technical data

Operating voltage	230 V AC
Frequency	50 Hz
Installation height	2 – 4 m
Installation type	Ceiling installation
Power consumption	~0,5 W
Light measurement	Mixed light measurement
Setting range brightness	30 – 3000 lx
Light switch-off delay	10 s - 60 min
Type of contact light	Relay 230 V/10 A µ-contact
Lamps	Incandescent/halogen lamps, fluorescent lamps, Energy saving lamps, LEDs
Incandescent/halogen lamp load	2300 W
Compact and flourescent lamps	1150 VA (cos φ = 0,5)
Inrush current	max. 400 A / 200 µs
LED lamp < 2 W	25 W
LED lamp 2-8 W	70 W
LED lamp > 8 W	80 W
Type of connection	Spring terminals
Ambient temperature	-15 °C … +50 °C
Type of protection	IP 54 (when fitted)

Description

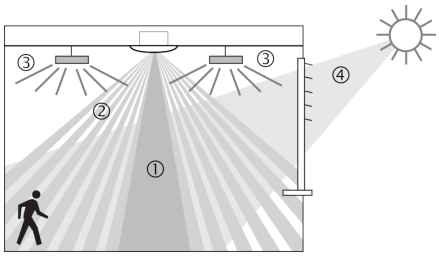

1 Mixed light measurement
2 Motion detection
3 Artificial light
4 Incident daylight

Channel A light

Switching response is controlled by presence and ambient brightness. The switch contact for channel A light closes during darkness and when someone is present. It opens with a delay once the room is vacated after the set time delay.

Time delay

The time delay enables delayed switching off of lighting after the room is vacated. The time delay is adjustable in a range of 10 s to 60 min.

Fully automatic

Lighting control of the motion detector operates fully automatically for increased comfort. In „fully automatic“ the lights switch on and off automatically.

Pulse function

Time delay can be set to pulse for controlling existing staircase light timer switch. To do so, the light output produces every 10 seconds a pulse of 0.5 seconds duration if people are present or it is dark.

Connection example

Switching

The motion detectors are operated as a master in individual switching. With parallel switching of the light outputs (L‘), it must be ensured that all detectors connected in parallel are connected to the same phase.

Individual switching

In individual switching, the motion detector as master detects presence and brightness and controls lighting.

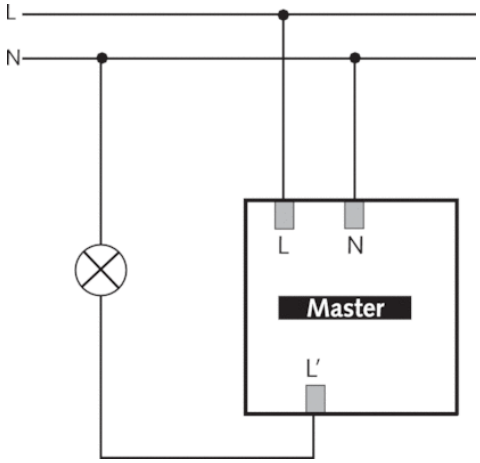

Detection range

The circular detection area of theMova S motion detector covers an average detection area. Note that moving persons can be detected in differently-sized areas. The recommended installation height is 2 m – 4 m. As installation height increases, the sensitivity of the presence detector decreases. The extent and distance between the active and passive zones of the motion detector also increases. The detection range is reduced as the temperature increases.

Mounting height (A)	Head on to (r)	Diagonally (t)
2 m	5 m² | 2,5 m	38 m² | 7 m
2,5 m	7 m² | 3 m	38 m² | 7 m
3 m	13 m² | 4 m	50 m² | 8 m
3,5 m	13 m² | 4 m	50 m² | 8 m
4 m	13 m² | 4 m	64 m² | 9 m

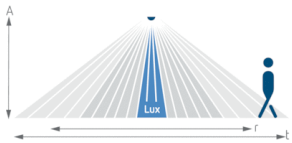

Brightness Measurement

The motion detector measures the ambient brightness below the detector at an opening angle approx. 120°. The installation site is a reference point for the lighting level. The light measurement is switched off when the light relay is switched on. If the brightness measurement is deactivated, the channel A light only switches depending on the presence (brightness switching value set to „measurement off“ via the remote control).

Suitable lamps loads

The motion detector is designed for the operation of fluorescent lamps, compact fluorescent lamps, halogen/incandescent lamps and LEDs. The maximum number of switchable lights is restricted due to the high inrush current levels of the EBs and LED drivers. The use of an external contactor helps with large loads. All switched loads must be properly suppressed.

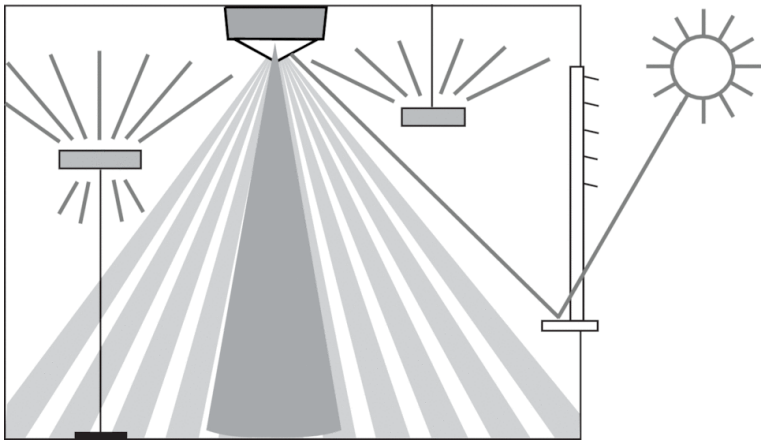

Scale drawings

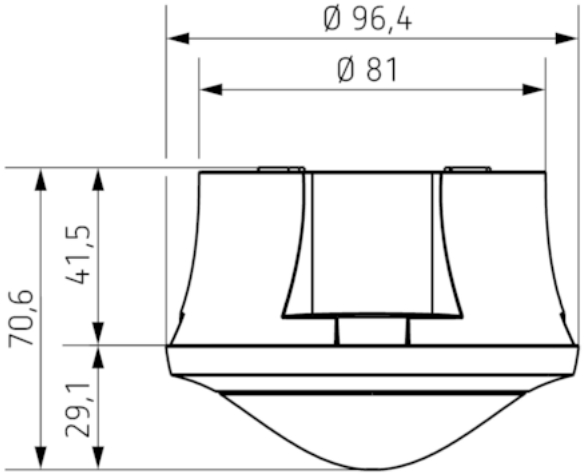

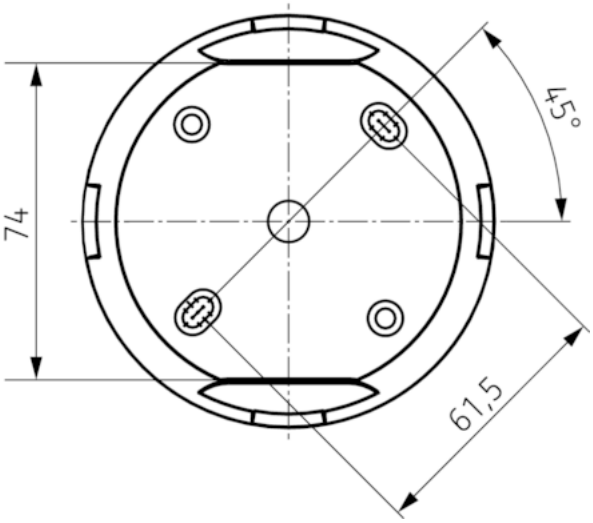

Accessories

SendoPro 868-A

- Article number: 9070675
  Details ▸ www.theben.de

theSenda P

- Article number: 9070910
  Details ▸ www.theben.de

theSenda S

- Article number: 9070911
  Details ▸ www.theben.de

Product selection

Installation type	Channel	Operating voltage	Colour	Type	Article number
Ceiling installation	Light	230 V AC		theMova S360-100 AP	

Installation type

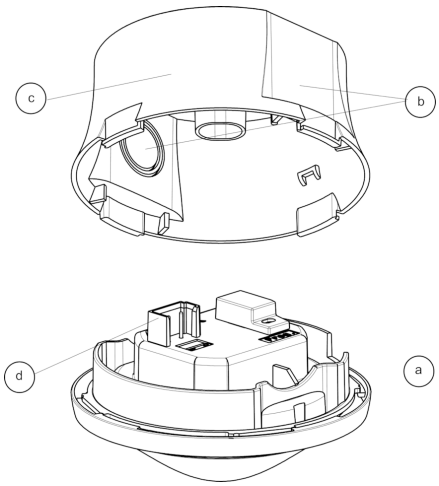

Ceiling installation - surface mounted

Turn the sensor unit (a) by about 20° counterclockwise, up to te snap-in point. Remove the sensor unit. Break out the required cable passages (b). Mount the surface-mounted housing (c) via the provided fastening holes to the ceiling. Perform the wiring (d). Put on the sensor unit (a). If a higher protection rating than IP 20 is required, the enclosed seals have to be used in case of ceiling installation (c). Also, the enclosed sticker «IP54» has to be applied to the outside.