theLuxa R180 WH | Article number: 1010200

Description

- Motion detector (PIR)
- Automatic lighting control based on presence and brightness
- 180° detection angle
- For outdoor use
- Protection from tampering thanks to the robust case design
- Covered operating controls under the secured front cover
- Adjustable brightness switching value and switch-off delay
- Area limit via lens attachment
- Mixed light measurement suitable for the control of fluorescent, incandescent, halogen lamps and LEDs
- Zero-cross switching for relay-saving switching and high lamp loads
- Test function for checking detection area
- Installation on flush-mounted socket possible (60 mm)
- Single-handed plug-in installation
- Instant start-up possible via factory preset
- Terminal for protective earth conductor

Technical data

Operating voltage	230 V AC
Frequency	50 – 60 Hz
Stand-by consumption	<0,5 W
Light measurement	Mixed light measurement
Number of channels	1
Colour	White
Switching output	Light
Installation type	Wall installation
Setting range brightness	2 – 200 lx
Switching capacity light	10 A (at 230 V AC, cos φ = 1), ,
Detection angle	180°
Installation height	2,5 – 4 m
Light switch-off delay	2 s-30 min
Incandescent lamp load	2300 W
Fluorescent lamp load (conventional) not corrected	500 VA
Fluorescent lamp load (conventional) parallel-corrected	500 W 60 µF
Fluorescent lamp load (conventional) series-corrected	500 VA
Fluorescent lamp load (electronic ballast)	500 W
Energy saving lamps	500 W

LED lamp < 2 W	50 W
LED lamp 2-8 W	500 W
LED lamp > 8 W	500 W
Lamps	Incandescent/halogen lamps, fluorescent lamps, Energy saving lamps, LEDs
Remote controlled	–
Ambient temperature	-25 °C … +45 °C
Protection class	II
Type of protection	IP 55

Connection example

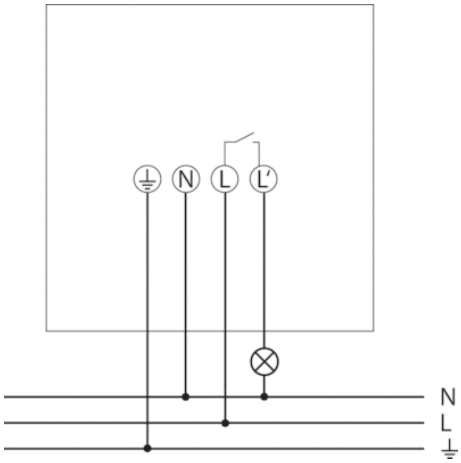

Detection range

Mounting height (A)	Head on to (r)	Diagonally (t)
2,5 m	5 m	12 m

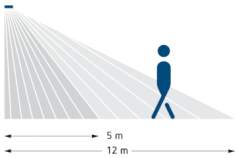

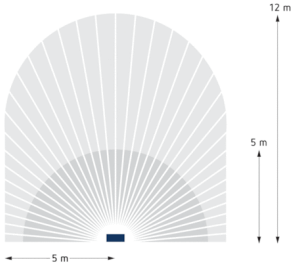

Scale drawings

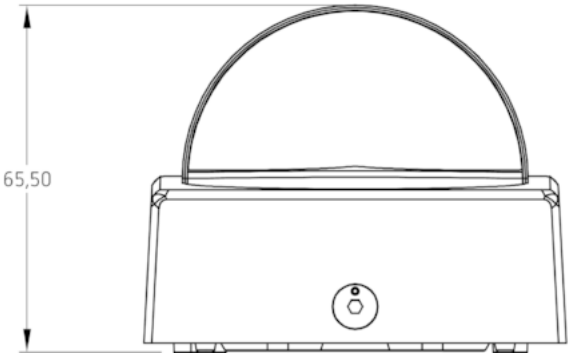

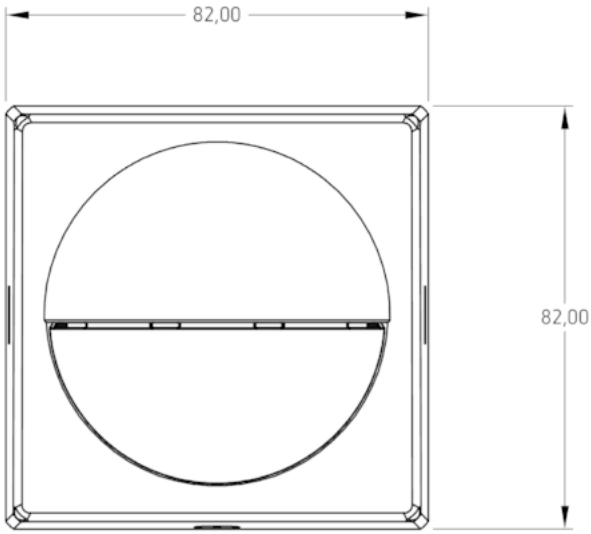

Accessories

Corner angle 10 WH

- Article number: 9070969
  Details ▸ www.theben.de

Spacer 10 WH

- Article number: 9070971
  Details ▸ www.theben.de