LUXA 103 S360-101-12 DE-UP WH

Item no.: 1030053

Presence and motion detectors
Indoor detectors

Description

- Passive infrared presence detector, ceiling installation as supplied or flush-mounting by means of removable springs/protection cap and enclosed mounting frame
- 1 channel light (relay 230 V) and 1 channel presence (relay potential-free for HVAC control)
- Circular detection area 360°, Ø 12 m (113 m²) at 3 m mounting height
- Extension of the detection area by parallel switching, a maximum of 8 detectors can be connected in parallel
- Networking with wall detector theMura Slave possible
- Connection option for push-button for manual switching
- Operation as fully or semi-automatic possible
- One directional brightness measurement (mixed light measurement)
- Teach-in function, pulse function, test function, staircase lighting function
- Ready for operation immediately due to factory presetting
- Changes of values and settings are possible with potentiometers and with one of these optional remote controls:
- App/universal remote control theSenda B
- Service remote control theSenda P
- Optional user remote control for manual override theSenda S/theSenda B
- Restriction of the detection range possible
- Also suitable for outdoor applications, by changing the installation location the detection range is reduced to Ø 8 m

Technical data

	LUXA 103 S360-101-12 DE-UP WH
Operating voltage	230 V AC
Frequency	50 Hz
Stand-by consumption	ca. 0.5 W
Light measurement	Mixed light measurement
Colour	White
Switching output	Light | Presence
Installation type	Ceiling installation
Setting range brightness	5 – 1000 lx
Detection angle	360°
Installation height	2.5 – 3.5 m
Light switch-off delay	15 s - 30 min
Presence switch-off delay	10 s - 120 min

	LUXA 103 S360-101-12 DE-UP WH
Switch-on delay presence	0 s – 10 min
Incandescent/halogen lamp load	2300 W
Inrush current	max. 500 A / 200 µs
LED lamp 2-8 W	400 W
LED lamp > 8 W	400 W
Lamps	Incandescent/halogen lamps, fluorescent lamps, Energy saving lamps, LEDs
Remote controlled	√
Ambient temperature	-25°C ... 55°C
Type of protection	IP 54 (when fitted)

LUXA 103 S360-101-12 DE-UP WH

Item no.: 1030053

Connection example

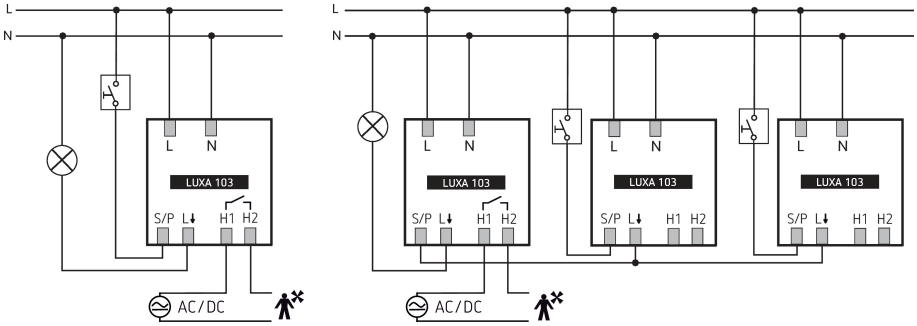

Detection range for planning applications

Mounting height (A)	Sitting (S)	Diagonally (T)	Head on to (R)
2.5 m	13 m² | 4 m	78 m² | 10 m	28 m² | 6 m
3 m	20 m² | 5 m	113 m² | 12 m	28 m² | 6 m
3.5 m	20 m² | 5 m	78 m² | 10 m	28 m² | 6 m

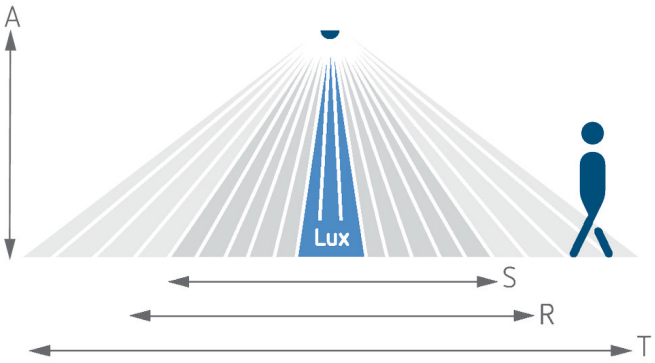

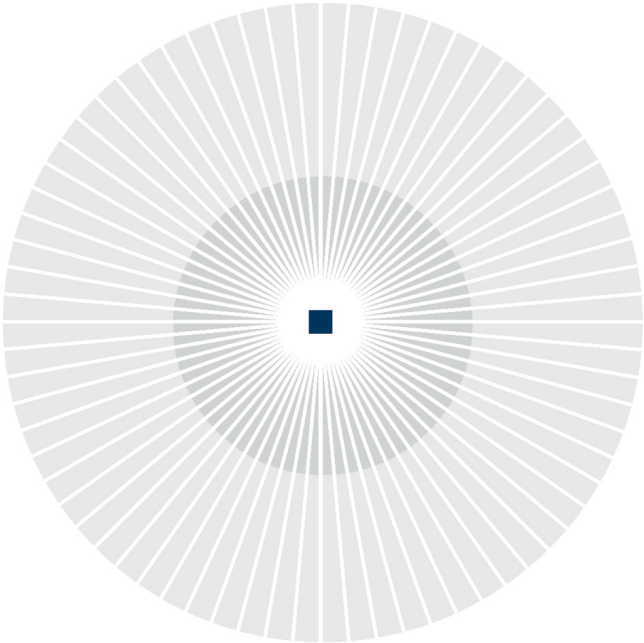

LUXA 103 S360-101-12 DE-UP WH

Item no.: 1030053

Scale drawings

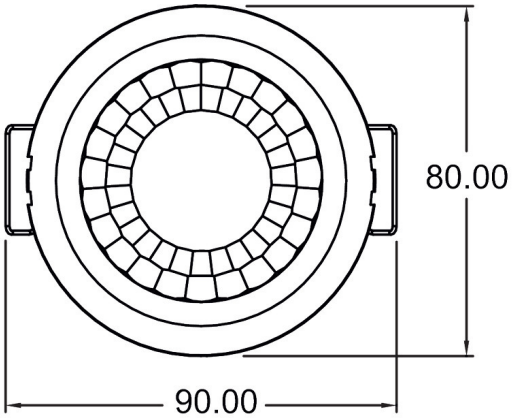

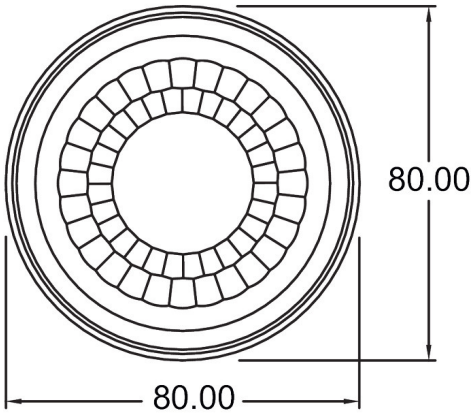

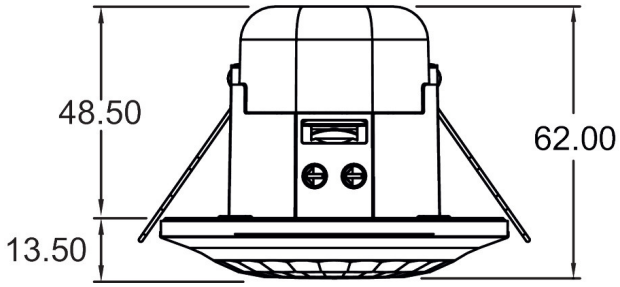

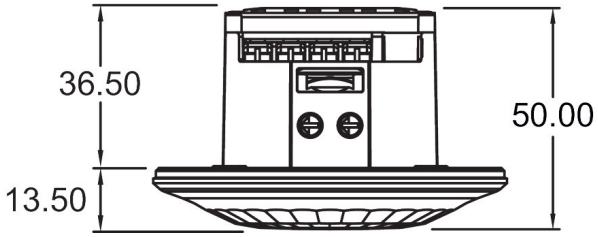

Accessories

theSenda P
Item no.: 9070910

theSenda S
Item no.: 9070911

theSenda B
Item no.: 9070985