LUNA 126 star E | Article number: 1260901

Description

- Twilight switch with integrated light sensor
- Fixed On and Off switching delay
  - to avoid faulty operation caused by lightning, car headlights etc.
- Cable feed from the back and from below
  - Cover with snap-on function when opening for the straightforward installation of the device
- Captive screws
- Large terminal area
- Brightness value can be set without opening the device
- Large light exposure angle (approx. 180 degrees)
- Infinitely adjustable switching brightness

Technical data

Operating voltage	230 V AC
Frequency	50 – 60 Hz
Number of channels	1
Stand-by consumption	~0,6 W
Setting range brightness	2 – 200 lx
Switch-on delay	20 s
Switch-off delay	80 s
Type of contact	NO contact
Switching output	Not potential-free (230 V)
Installation type	Wall installation or mast bracket
Type of connection	Screw terminals
Switching capacity	16 A (at 230 V AC, cos φ = 1), 10 AX (at 230 V AC, cos φ = 0.3)
Incandescent lamp load	2300 W
Halogen lamp load	2300 W
Fluorescent lamp load (electronic ballast)	350 W
LED lamp < 2 W	30 W
LED lamp 2-8 W	350 W
LED lamp > 8 W	350 W
Housing and insulation material	High-temperature resistant, self-extinguishing thermoplastic
Ambient temperature	-35 °C … +55 °C
Type of protection	IP 55
Protection class	II

Connection example

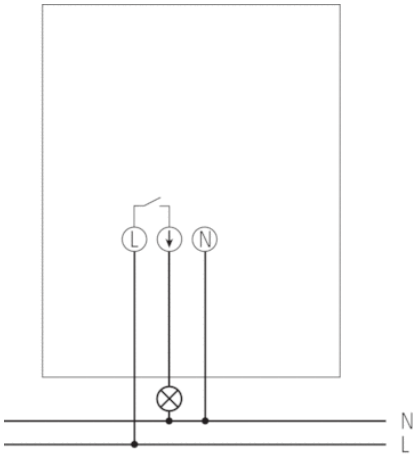

Scale drawings

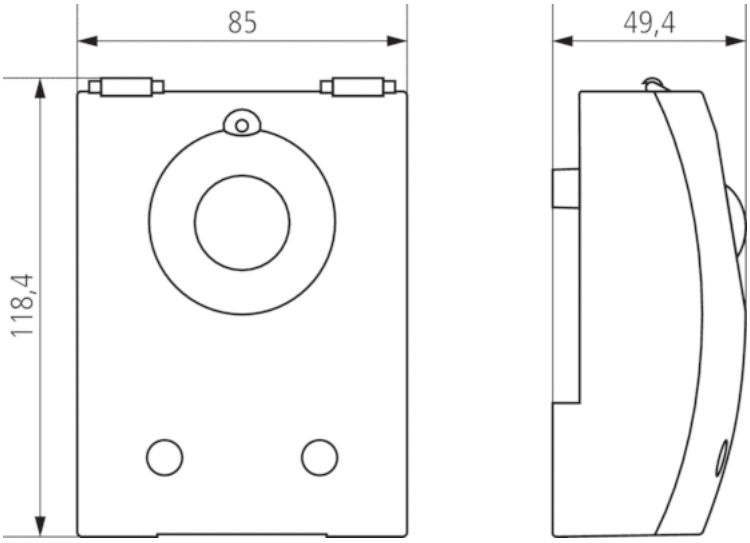

Accessories

Adapter plate LUNA star

- Article number: 9070486
  Details ▸ www.theben.de