KALLISTA®

Citizen® One-Piece Toilet

P70340

ADA | CSA B651 | OBC

WaterSense Meets EPA Criteria
Certified by IAPMO R&T

FEATURES

- *Vitreous china*
- *Chair-height seating*
- *1.28 gpf (4.8 lpf)*
- *2-1/8" (54 mm) glazed trapway*
- *Includes polished chrome plated brass trip lever*

CODES/STANDARDS APPLICABLE

Specified model meets or exceeds the following:

- *ADA*
- *ICC/ANSI A117.1*
- *CSA B651*
- *OBC*
- *ASME A112.19.2/CSA B45.1*
- *EPA WaterSense®*

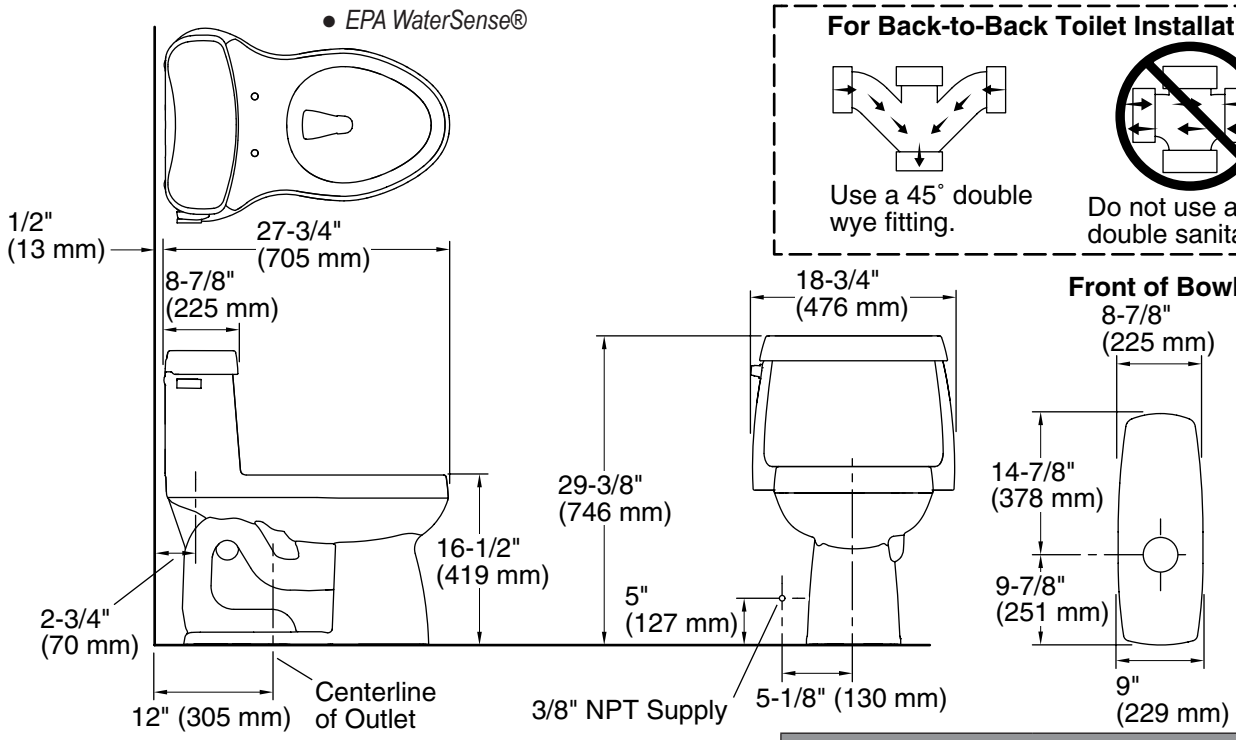

For Back-to-Back Toilet Installations

Use a 45˚ double wye fitting.

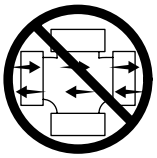

Do not use a double sanitary tee.

INSTALLATION NOTES

Will comply with the American Disabilities Act **(ADA)** when installed per the requirements of the Accessibility Guidelines, Section 604 Water Closets, of the Act. The Model Plumbing Codes require the installation of elongated open-front toilet seats in public bathrooms.

Will comply with **CSA B651** when installed per Clause 4.3.6 of the standard.

Will comply with **OBC** when installed per Clause 3.8.3.8 and 3.8.3.9.

For back-to-back toilet installations: Use only a 45° double wye fitting.

The model is acceptable for left-hand accessible compartment installations only.

PRODUCT INFORMATION

Fixture:	
Configuration	one-piece, elongated
Water per flush	1.28 gal (4.8 L)
Passageway	2-1/8" (54 mm)
Water area	11" (279 mm) x 8-1/8" (206 mm)
Water depth from rim	6-1/4" (159 mm)
Seat post hole centers	5-1/2" (140 mm)

SPECIFIED MODEL

Model	Description	Finishes	
P70340-00	Citizen One-Piece Toilet	❑ 0 Stucco White	
Recommended Accessories (Choose one)			
P70313-CP, AD, AG, BL or BV	Contemporary Toilet Seat with Finished Brass, Slow-Close Hinges	❑ 0 Stucco White	❑ 96 Linen
P70334-CP, AD, AG, BL or BV	Premium Toilet Seat with Finished Brass, Slow-Close Hinges	❑ JV Java	❑ KZ Brunette
		❑ EM Ebonized Mahogany	
Optional Accessory			
P70341-00	Citizen Trip Lever Finish Upgrade	❑ AD Nickel Silver	❑ LB Bronze
		❑ AG Brushed Nickel	❑ GN Gunmetal

We reserve the right to make revisions without notice in the design of products or in packaging unless this right has specifically been waived at the time the order is accepted.

© 2017 KALLISTA

Questions? Problems? For additional assistance, please contact KALLISTA's Customer Service Department at 1-888-4-KALLISTA (1-888-452-5547) or kallista.com.