UF22F Series

Size : ø223 x 60
Unit : mm

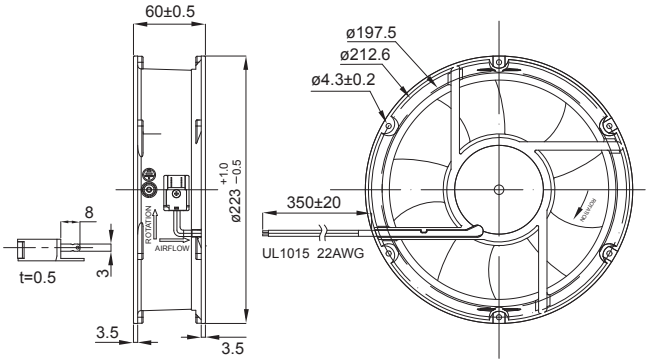

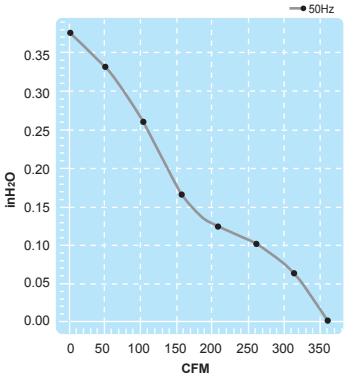

Thermally-Protected

Terminal or Lead Wire Type

Spec. / Model	Rated Voltage V	Frequency Hz	Input Power W	Rated Current A	Locked Current A	Speed RPM	Maximum Air Flow m³/min.	Maximum Air Flow CFM	Maximum Pressure mmH₂O	Maximum Pressure InchH₂O	Noise dB	Weight kg
UF22F23-H	230	50	47	0.35	0.56	2700	11	400	10.9	0.43	57	1.5

UF20J(C) Series

Size : 205 x 205 x 90
Unit : mm

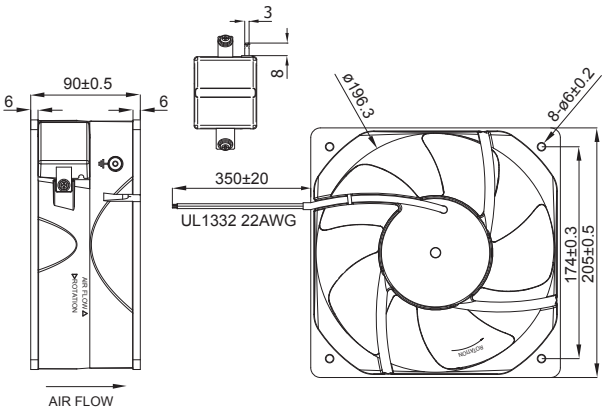

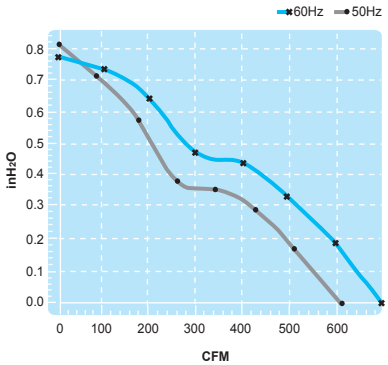

Thermally-Protected

Terminal or Lead Wire Type

Spec. / Model	Rated Voltage V	Frequency Hz	Input Power W	Rated Current A	Locked Current A	Speed RPM	Maximum Air Flow m³/min.	Maximum Air Flow CFM	Maximum Pressure mmH₂O	Maximum Pressure InchH₂O	Noise dB	Weight kg
UF20JC11-H	115	50	70	0.62	1.22	2800	17.0	600	20.3	0.80	67	2.4
		60	98	0.90	1.22	3200	19.3	680	19.8	0.77	71	
UF20JC23-H	230	50	70	0.32	0.60	2800	17.0	600	20.3	0.80	67	2.4
		60	98	0.45	0.61	3200	19.3	680	19.8	0.77	71	