DATA SHEET

VXLF 2.200

ROTARY VANE VACUUM PUMPS

oil-free
air-cooled

MAKE IT BECKER.

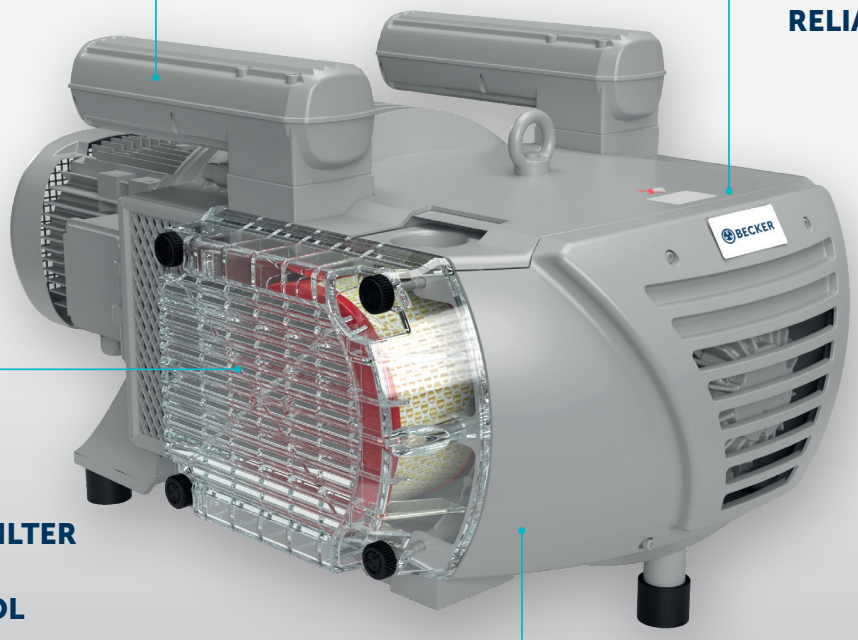

100% OILLESS OPERATION

ROBUST & RELIABLE

TRANSPARENT FILTER CAP FOR SIMPLE VISUAL CONTROL

VANE LIFETIME OF 20,000 OPERATING HOUR
or 3 years

BECKER

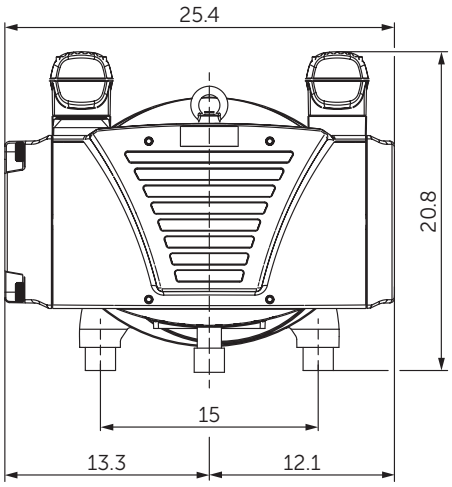

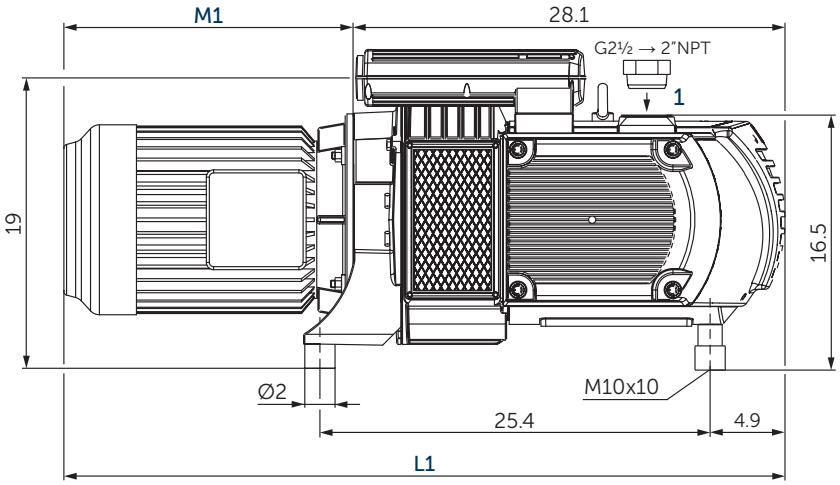

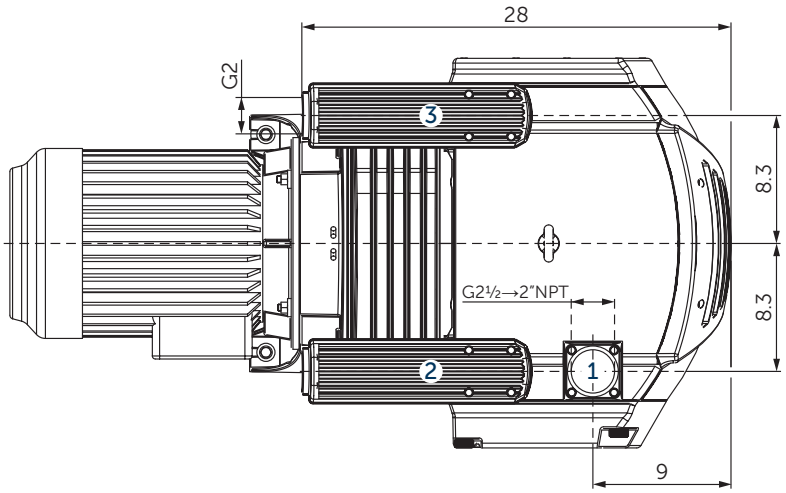

1 Vacuum connection (G2½)
2 Vacuum relief valve with silencer
3 Blow-off valve with silencer
L Overall device length L1 with motor. L1 and M1 are variable, see separate motor specification sheet.

- Including integrated suction air filter
- The motor illustration may vary.
- Dimensions in inch

Suction air rate		Vacuum		Installed motor power		Emission sound pressure level [1]		Weight w/o motor
CFM		in. HgV		hp		dB(A)		lbs
50 Hz	60 Hz	50 Hz	60 Hz	50 Hz	60 Hz	50 Hz	60 Hz	
105	128	23.6	23.6	5.4	6.4	75	77	333

[1] According to DIN EN ISO 3744 (KpA = 3 dB(A)), 39.4 inch distance, at medium load, both connection sides piped

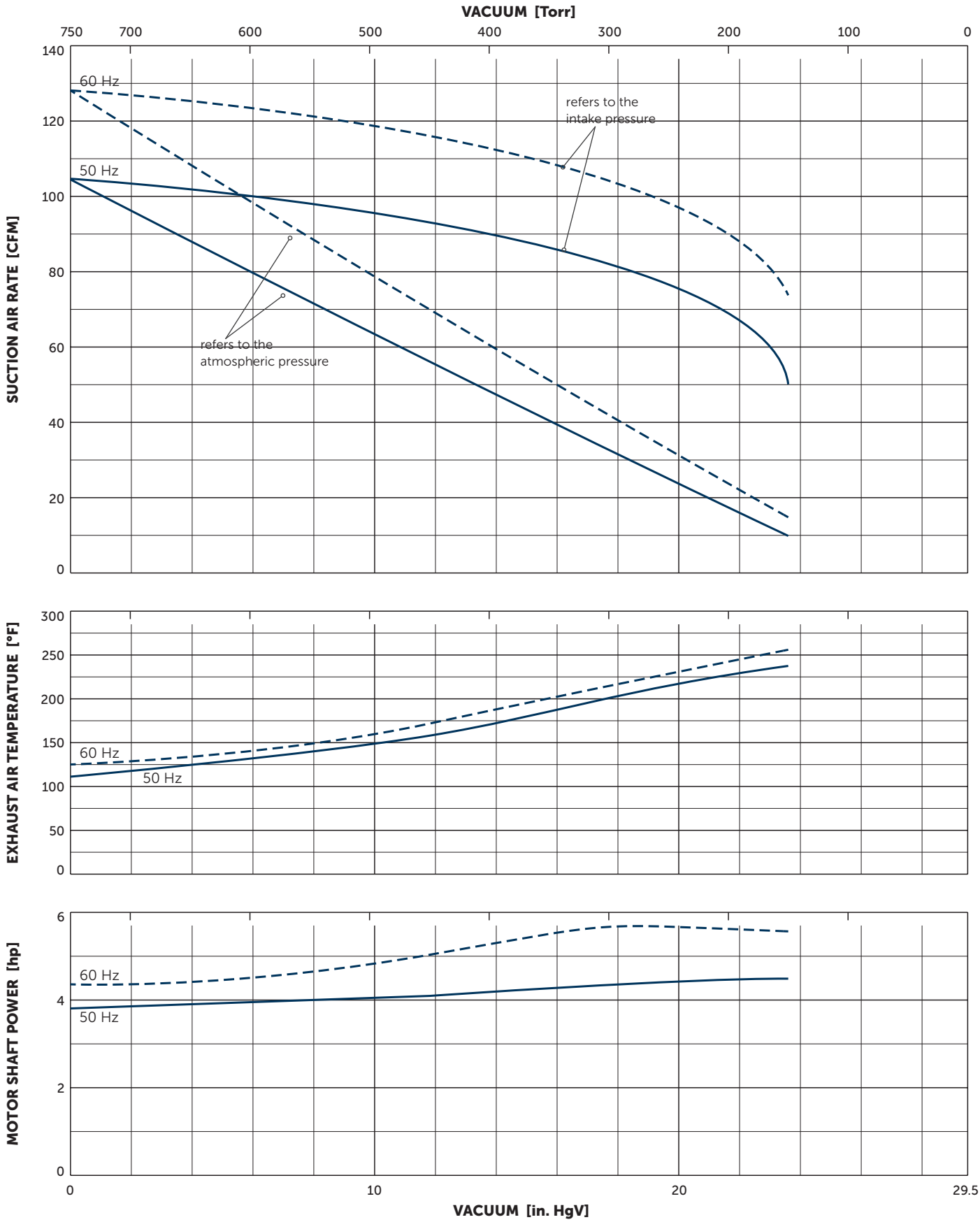

Reference data (atmosphere): 0 in. HgV, 68°F; Tolerance: ±5%

VARIANTS AND ACCESSORIES

- Integrated non return valve
- External suction filter [1)]
- Sound proof box SH 10 [1)]

Example for an external suction filter

Sound proof box SH 10

[1)] See separate data sheet
- Possible combinations on request

Right of modification reserved 2023-04-20

MAKE IT BECKER.

HOMEPAGE
VXLF SERIES

DOWNLOAD
MOTOR SPECS.

ONLINE SHOP
VXLF 2.200

www.beckerpumps.com
www.becker-international.com

BECKER