DATA SHEET

VT 4.16
ROTARY VANE VACUUM PUMPS

oil-free
air-cooled

MAKE IT BECKER.

figure VT 4.40

BECKER

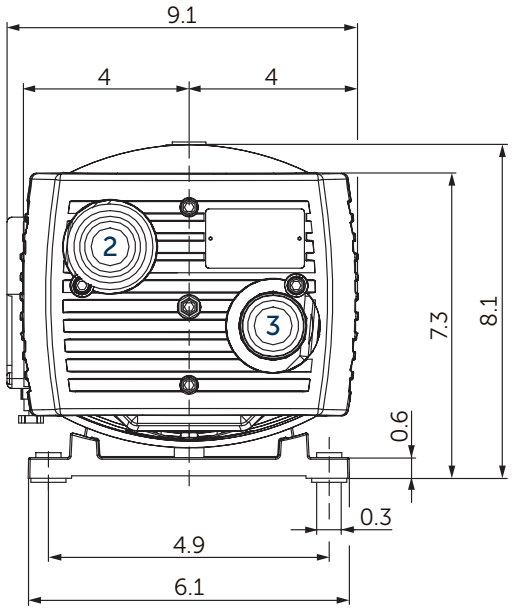

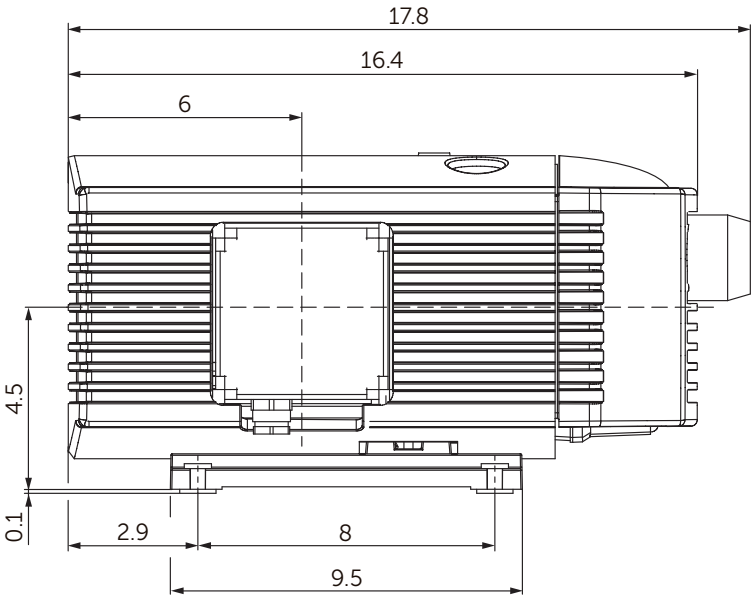

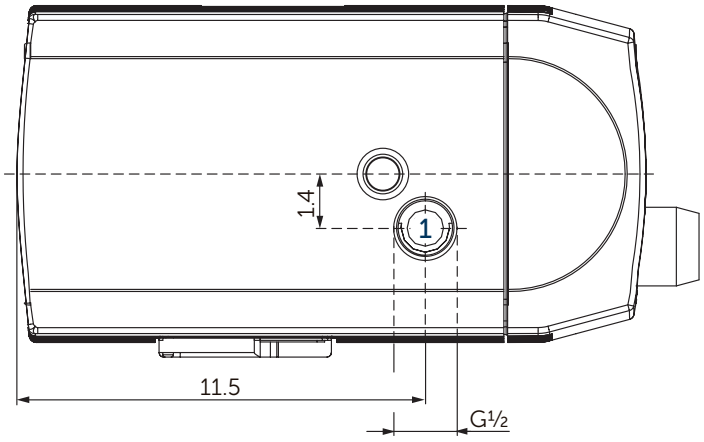

1 Vacuum connection (G½)
2 Vacuum regulating valve
3 Blow-off valve
- Including integrated suction air filter
- The illustration of the terminal box may vary.
- Dimensions in inch

Suction air rate		Vacuum		Emission sound pressure level [1]		Weight with motor [2]
CFM		Torr	in. HgV	dB(A)		lbs
50 Hz	60 Hz	50 & 60 Hz	50 & 60 Hz	50 Hz	60 Hz	
9.4	11.2	112.5	25.1	61	64	≈49.6

[1] According to DIN EN ISO 3744 (KpA = 3 dB(A)), 39.4 inch distance, at medium load, both connection sides piped
[2] Depending on the motor

3~ Motors										
#	50 Hz					60 Hz				Version
	hp	V		rpm	A	hp	V		rpm	A	
01	0.7	Δ230/Y400	IE2	1445	3.10/1.79	0.9	Δ208/Y360 Δ230/Y400 Δ265/Y460	IE2 IE2 IE2	1690 1715 1740	3.14/1.81 3.03/1.75 3.05/1.76	IP54 • ISO F PTO (bimetal) 150°C
02	0.7	175–260/ 300–450		1420	3.8/2.2	0.9	202–300/ 350–520		1700	3.9/2.25	IP54 • ISO F

1~ Motors									
#	50 Hz				60 Hz				Version
	hp	V	rpm	A	hp	V	rpm	A	
01	0.7	230 ±10%	1360	4.6	0.9	230 ±10%	1600	5.2	IP54 • ISO F 20 µF (450 V)
02					0.9	115 ±6%	1630	9.5	UL(E123782) IP54 • ISO F 80 µF (240 V)

- Type plate data on current consumption and rotation speed of the motors may vary. Tolerance -1.5/+2% in each case.

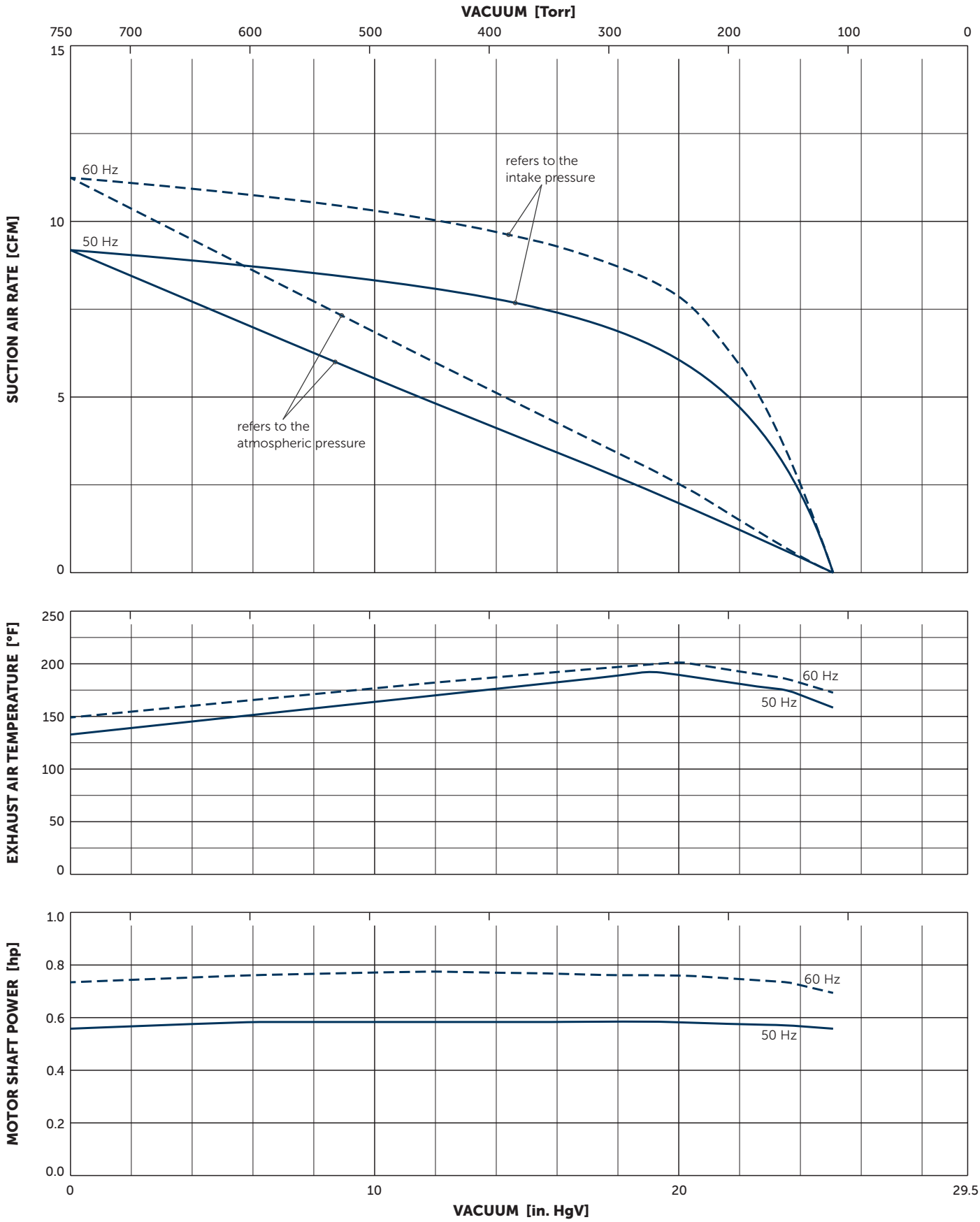

Reference data (atmosphere): 0 in. HgV, 68°F; Tolerance: ±5%
Air temperature: 41°F ... 135°F

VARIANTS AND ACCESSORIES

VX 4.16

SERIES X: BECKER INNOVATION WITH TOP WARRANTY

Equipped with specially developed vanes, these oil-free rotary vane pumps distinguish themselves by high abrasion resistance, and with that extremely long service lives. Due to the low wear there is also minimal dust, so the series X pumps are perfectly suited for precision processes under clean room conditions.

This innovation branded by Becker is outstanding not only because of its 100 percent oil-free operation, excellent degree of efficiency and low power consumption.

In the area of sensitive vacuum, series X also guarantees precise low-pulsation air conduction.

Becker guarantees for these pumps a vane life-time of 20,000 operating hours or a maximum of 3 years. The enhanced longevity of X series pumps also extends service life intervals, and can cut out the need for frequent service visits with costly pump failures now no longer an issue.

ADVANTAGES

- Quick, clean and quiet
- Oil-free
- Wear resistant
- Energy saving
- Long-life reliability
- Ultimate pressure 26.6 in. HgV

OTHER VARIANTS AND ACCESSORIES

- With external suction filter [1)]
- Sound proof box SH 20 [1)]

Example for an external suction filter

Sound proof box SH 20

[1)] See separate data sheet
- Possible combinations on request

Right of modification reserved 2022-11-22

MAKE IT BECKER.

BECKER

www.becker-international.com