Tuthill

# Engineering Data Pack

## GlobalGear® Series Pump Metric

V 1.28

Excellence at work. Excellence in life.

## Table of Contents


GG015 - GG030 with Angle Ports (Flanged Only) Mounting Dimensions ..... 3

IG015I - IG030I with Integral Angle Ports (NPT Only) Mounting Dimensions ..... 4

GG015 - GG030 with Side Ports (Flange Only) Mounting Dimensions ..... 5

IG015I - IG030I with Integral Side Ports Mounting Dimensions ..... 6

GG050 - GG070 with Angle Ports (NPT & Flange/Iron Only) Mounting Dimensions ..... 7

GG050 - GG070 with Side Ports (NPT & Flange) Mounting Dimensions ..... 8

GG080 - GG090 with Angle Ports (NPT & Flange) Mounting Dimensions ..... 9

GG080 - GG090 with Side Ports (NPT & Flange) Mounting Dimensions ..... 10

GG120 - GG130 with Angle Ports (CI & SS Only) Mounting Dimensions ..... 11

GG120 - GG130 with Side Ports (CI, SS, & CS) Mounting Dimensions ..... 12

GG200 - GG210 with Angle Ports Mounting Dimensions ..... 13

GG200 - GG210 with Side Ports Mounting Dimensions ..... 14

GG250 with Angle Ports Mounting Dimensions ..... 15

GG250 with Side Ports Mounting Dimensions ..... 16

GG550 with 6" Side Ports (CI, SS, & CS) Mounting Dimensions ..... 17

GG550 with 4" Angle Ports (CI Only) Mounting Dimensions ..... 18

GlobalGear® Model Number System ..... 19

GlobalGear® Material of Construction ..... 20

GlobalGear® Clearance Viscosity Limits ..... 21

GlobalGear® Temperature Limits ..... 21

GlobalGear® Materials of Construction ..... 22

GlobalGear® Standard Seal Specifications (GG015 – GG030) ..... 23

GlobalGear® Standard Seal Specifications (GG050 – GG090) ..... 24

GlobalGear® Standard Seal Specifications (GG120 – GG250) ..... 25

GlobalGear® Standard Seal Specifications (GG550) ..... 26

GlobalGear® Seal Chamber Dimensions Mech Seal (Inboard Location, Inch Shaft) ..... 27

GlobalGear® Seal Chamber Dimensions Mech Seal (Outboard Location, Inch Shaft) ..... 28

GlobalGear® Seal Chamber Dimensions Packing ..... 29

GlobalGear® Seal Chamber Dimensions Cartridge Seal ..... 30

GlobalGear® Jackets Data & Dimensions ..... 31

Dimensions - 90° Ports ..... 31

GlobalGear® Jackets Data & Dimensions ..... 32

Dimensions - 180° Ports ..... 32

GlobalGear® NPSH Data ..... 33

GlobalGear® Flange Ratings (Cast Iron) ..... 34

GlobalGear® Flange Ratings (Stainless Steel) ..... 34

GG Series Pumps Nozzle Loading Data ..... 35

## GG015 - GG030 with Angle Ports (Flanged Only) Mounting Dimensions

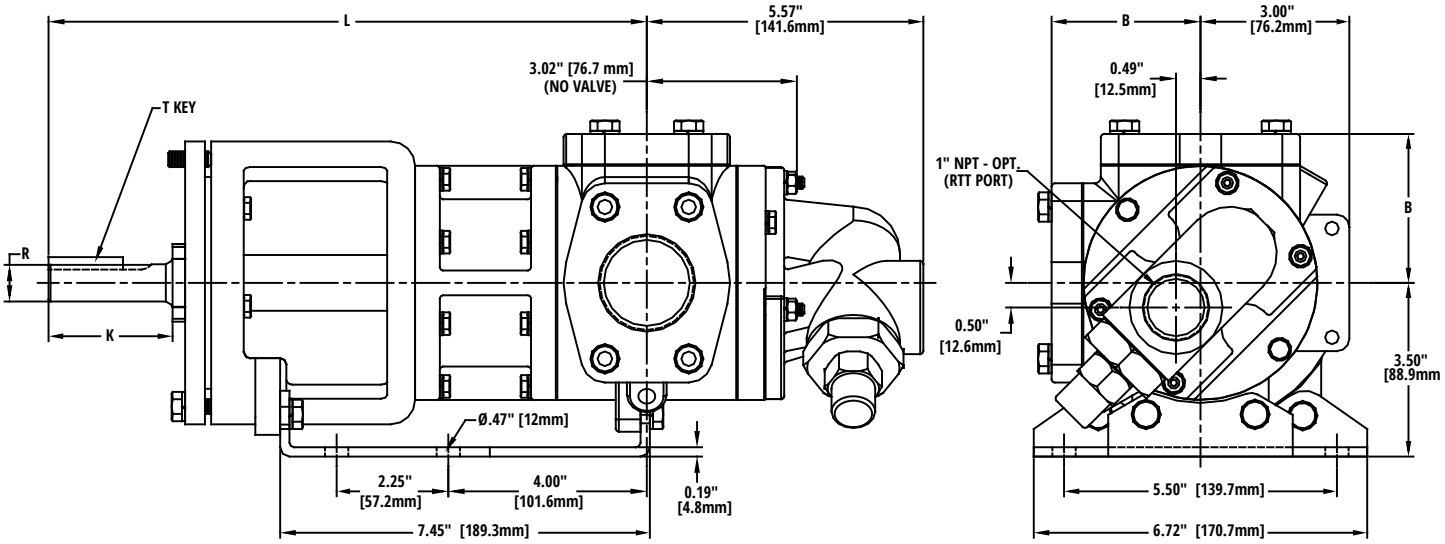


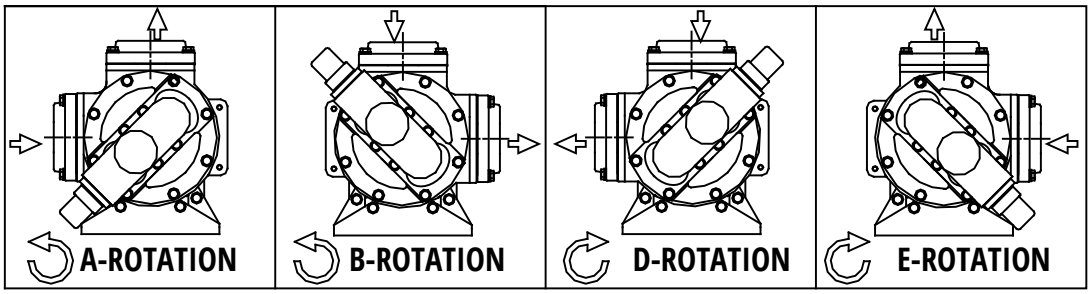


### Shaft Dimensions

| Shaft Design | K | R | T | L |
|---|---|---|---|---|
| Inch (") | 2.10 | 0.75 | 3/16 x 3/16 x 1.5 | 12.07 |
| Metric (mm) | 35 | 16 | 5 x 5 x 25 | 264 |

### Port Dimensions

| Port Type | B |
|---|---|
| ANSI | 4.00" [102mm] |

### Back Pull-Out Dimensions

| Size | Min Spacer |
|---|---|
| GG015 | 1.60" [41mm] |
| GG030 | 2.22" [56mm] |

### Face Type

| | Size-Rating |
|---|---|
| Raised Face | 1 1/2" & 2" - ANSI 250# |
| Flat Face | 1 1/2" & 2" - ANSI 125# |
| | 2" - ANSI 150# |

# IG015I - IG030I with Integral Angle Ports (NPT Only) Mounting Dimensions

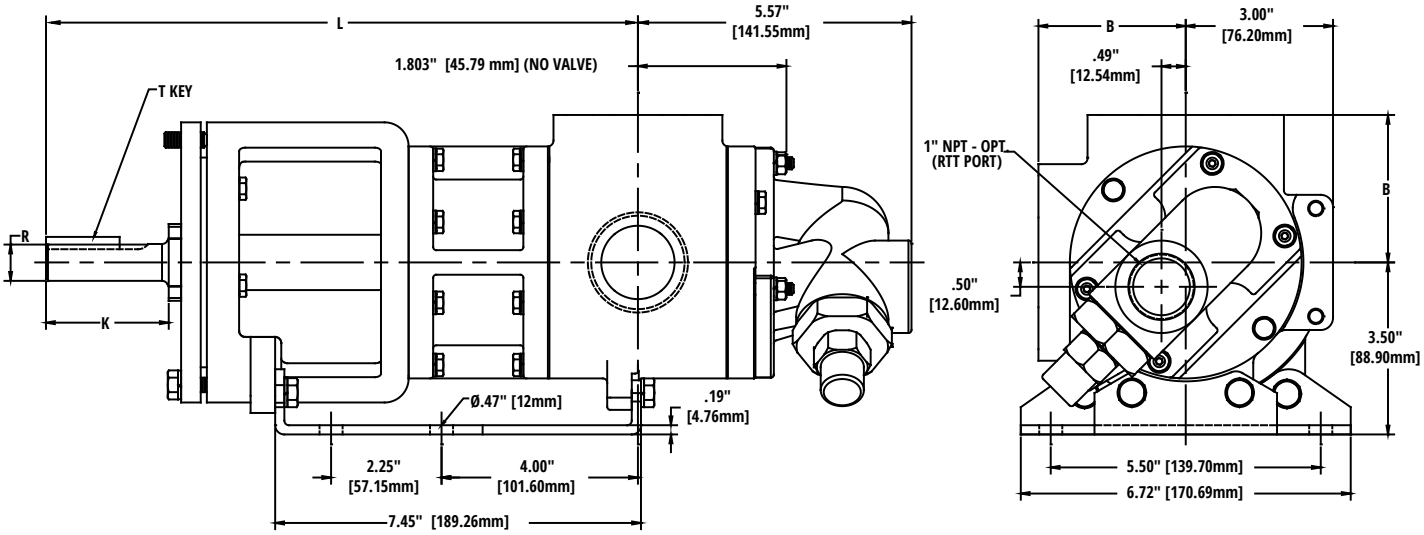


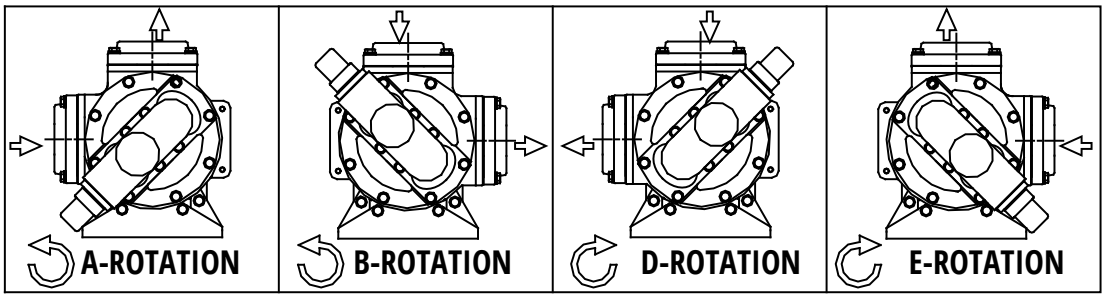


## Shaft Dimensions

| Shaft Design | K | R | T | L |
|---|---|---|---|---|
| Inch (") | 2.10 | 0.75 | 3/16 x 3/16 x 1.5 | 12.07 |
| Metric (mm) | 35 | 16 | 5 x 5 x 25 | 264 |

## Port Dimensions

| Port Type | B |
|---|---|
| 1-1/2" FNPT (CI) | 3.00" [76mm] |

## Back Pull-Out Dimensions

| Size | Min Spacer |
|---|---|
| GG015 | 1.60" [41mm] |
| GG030 | 2.22" [56mm] |

## GG015 - GG030 with Side Ports (Flange Only) Mounting Dimensions

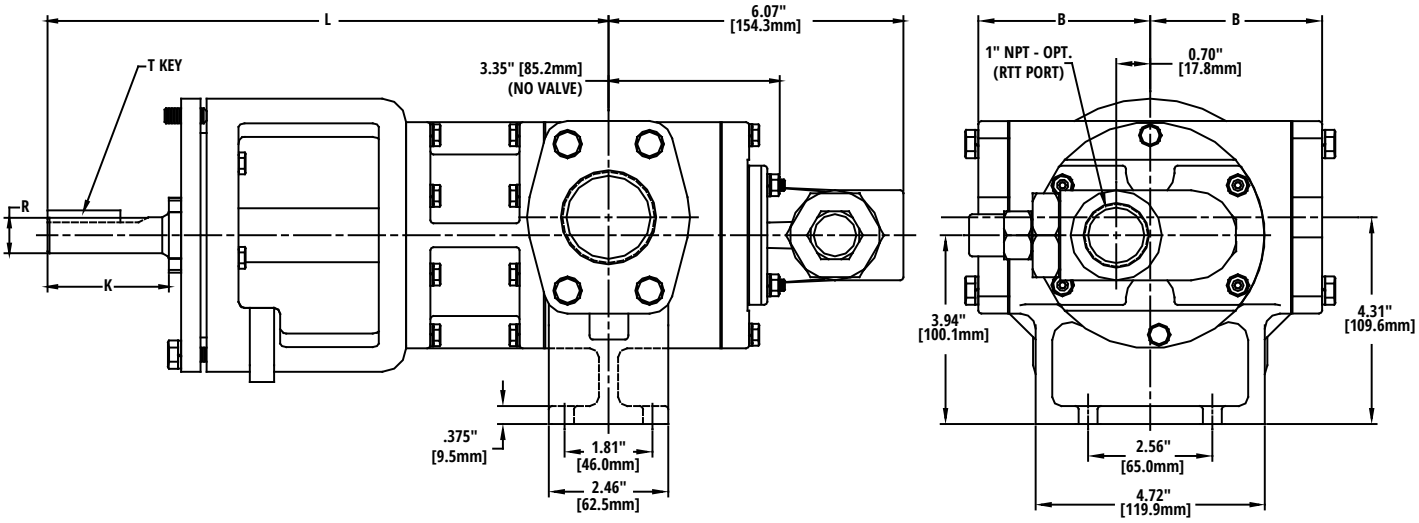


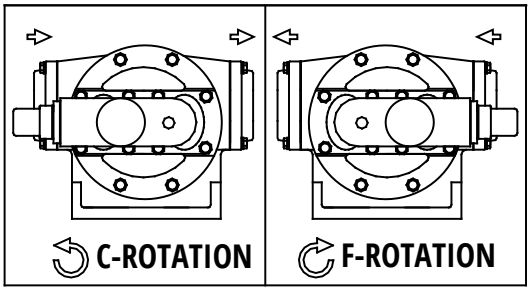


### Shaft Dimensions

| Shaft Design | K | R | T | L |
|---|---|---|---|---|
| Inch (") | 2.36 | 0.75 | 3/16 x 3/16 x 1.5 | 11.56 |
| Metric (mm) | 40 | 16 | 5 x 5 x 25 | 251 |

### Port Dimensions

| Port Type | B |
|---|---|
| ANSI | 4.54" [115mm] |

### Back Pull-Out Dimensions

| Size | Min Spacer |
|---|---|
| GG015 | 1.60" [41mm] |
| GG030 | 2.22" [56mm] |

### Face Type

| | Size-Rating |
|---|---|
| Flat Face | Any Offered Size - ANSI 125# |
| | Any Offered Size - ANSI 150# |

## IG015I - IG030I with Integral Side Ports Mounting Dimensions

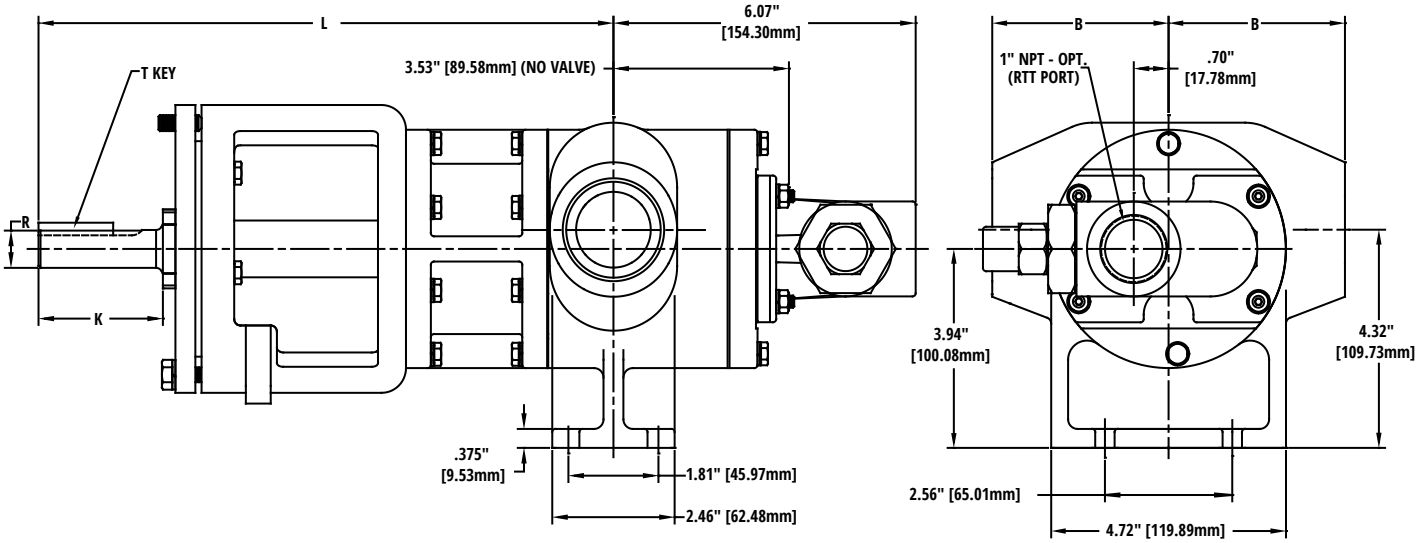


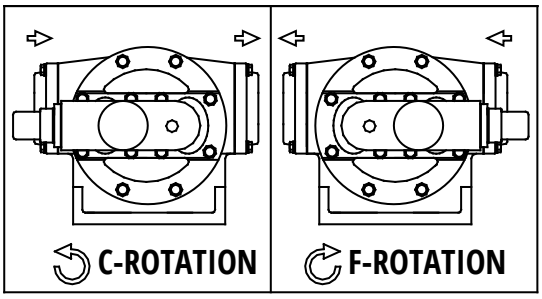


### Shaft Dimensions

| Shaft Design | K | R | T | L |
|---|---|---|---|---|
| Inch (") | 2.36 | 0.75 | 3/16 x 3/16 x 1.5 | 11.56 |
| Metric (mm) | 40 | 16 | 5 x 5 x 25 | 251 |

### Port Dimensions

| Port Type | B |
|---|---|
| 1-1/2" FNPT (CI) | 3.54" [90mm] |

### Back Pull-Out Dimensions

| Size | Min Spacer |
|---|---|
| GG015 | 1.60" [41mm] |
| GG030 | 2.22" [56mm] |

## GG050 - GG070 with Angle Ports (NPT & Flange/Iron Only) Mounting Dimensions

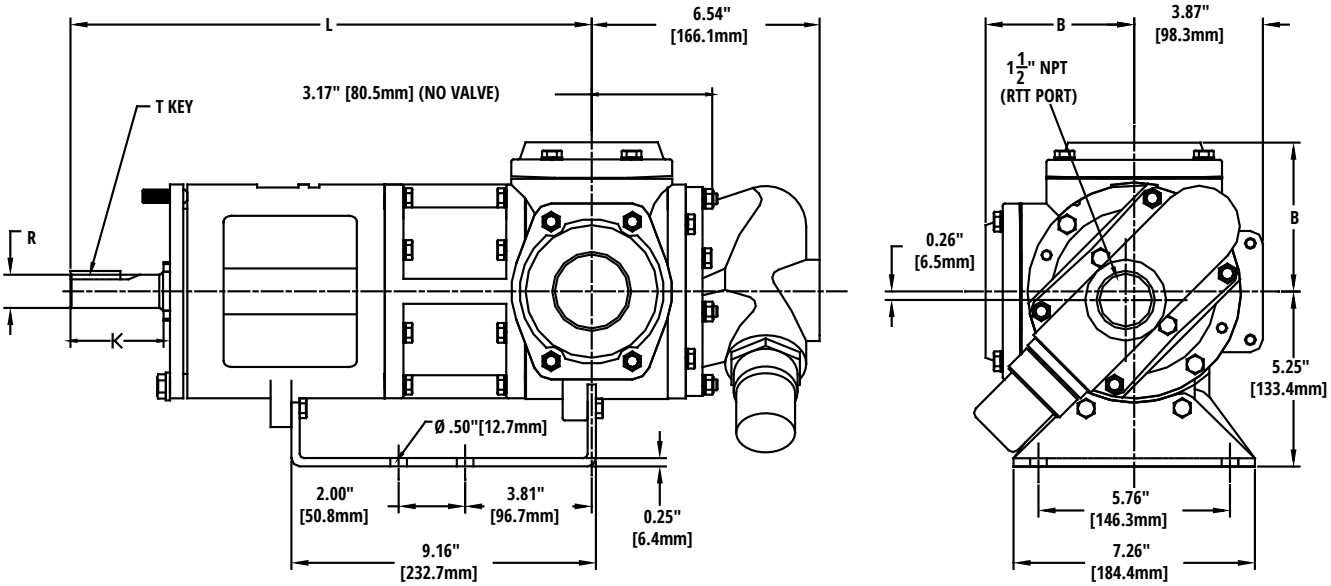


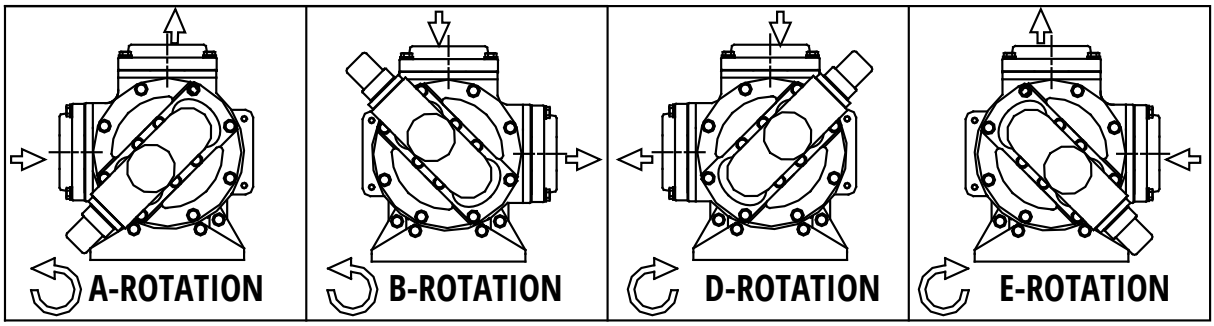


### Shaft Dimensions

| Shaft Design | K | R | T | L |
|---|---|---|---|---|
| Inch (") | 2.67 | 1.00 | 1/4 x 1/4 x 1.5 | 15.63 |
| Metric (mm) | 64.5 | 27 | 8 x 7 x 45 | 343 |

### Port Dimensions

| Port Type | B |
|---|---|
| 2" FNPT | 4.50" [114mm] |
| ANSI | 5.35" [136mm] |

### Back Pull-Out Dimensions

| Size | Min Spacer |
|---|---|
| GG050 | 2.21" [56mm] |
| GG070 | 2.61" [66mm] |

### Face Type

| | Size-Rating |
|---|---|
| Raised Face | Any Offered Size - ANSI 250# |
| Flat Face | Any Offered Size - ANSI 125# |

## GG050 - GG070 with Side Ports (NPT & Flange) Mounting Dimensions

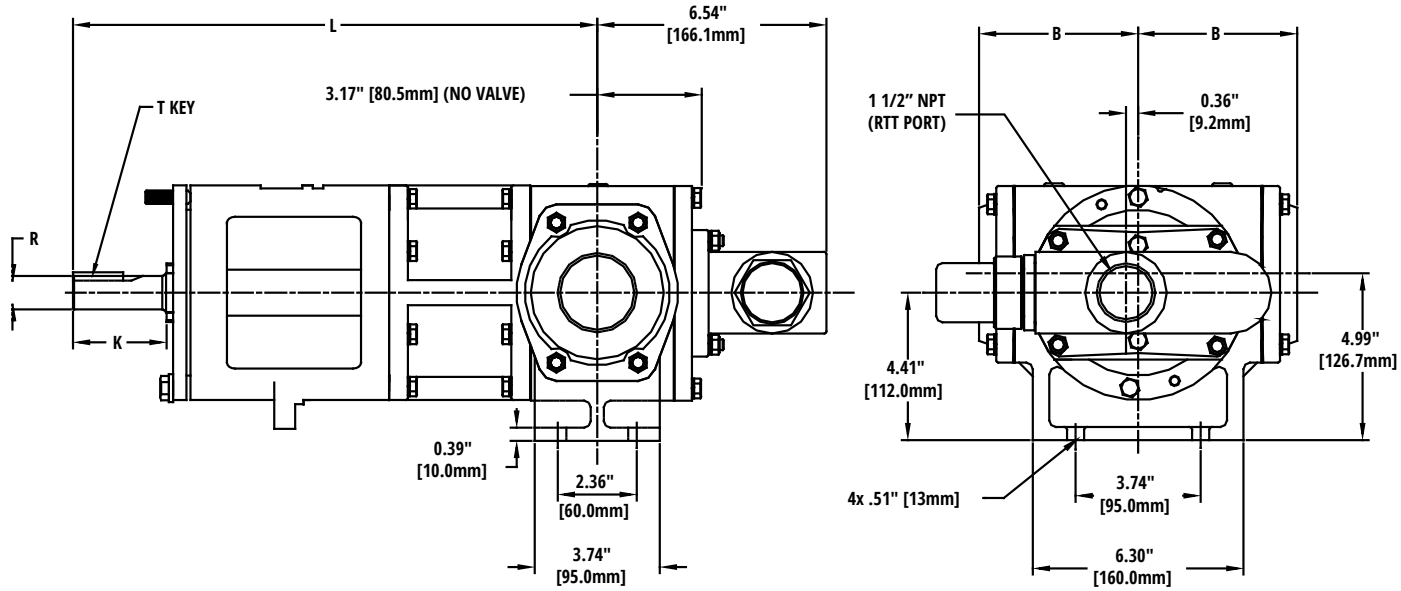


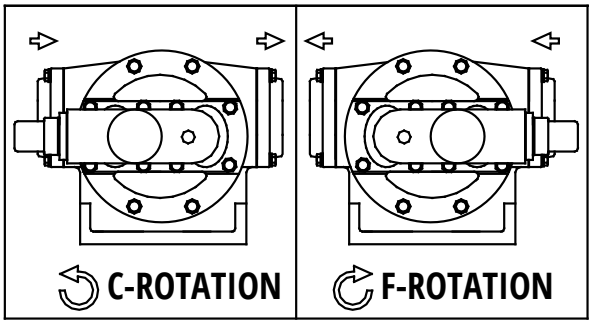


### Shaft Dimensions

| Shaft Design | K | R | T | L |
|---|---|---|---|---|
| Inch (") | 2.67 | 1.00 | 1/4 x 1/4 x 1.5 | 15.63 |
| Metric (mm) | 64.5 | 27 | 8 X 7 X 45 | 343 |

### Port Dimensions

| Port Type | B |
|---|---|
| 2" FNPT | 4.03" [102mm] |
| ANSI | 4.88" [124mm] |

### Back Pull-Out Dimensions

| Size | Min Spacer |
|---|---|
| GG050 | 2.21" [56mm] |
| GG070 | 2.61" [66mm] |

### Face Type

| | Size-Rating |
|---|---|
| Flat Face | Any Offered Size - ANSI 125# |

## GG080 - GG090 with Angle Ports (NPT & Flange) Mounting Dimensions

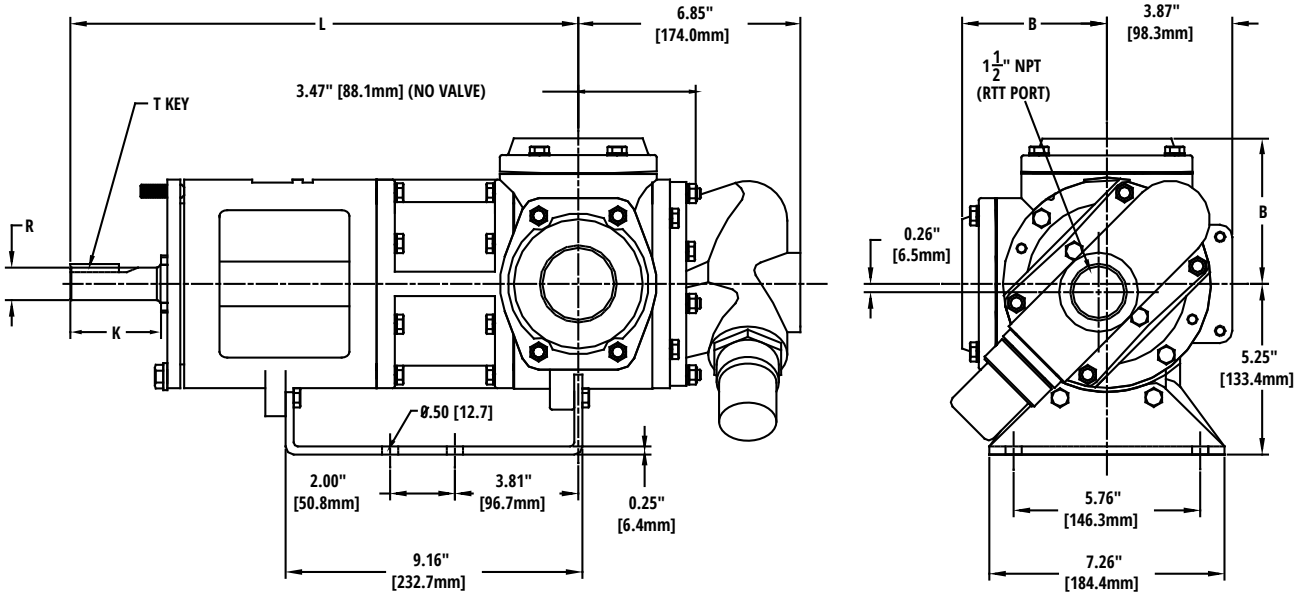


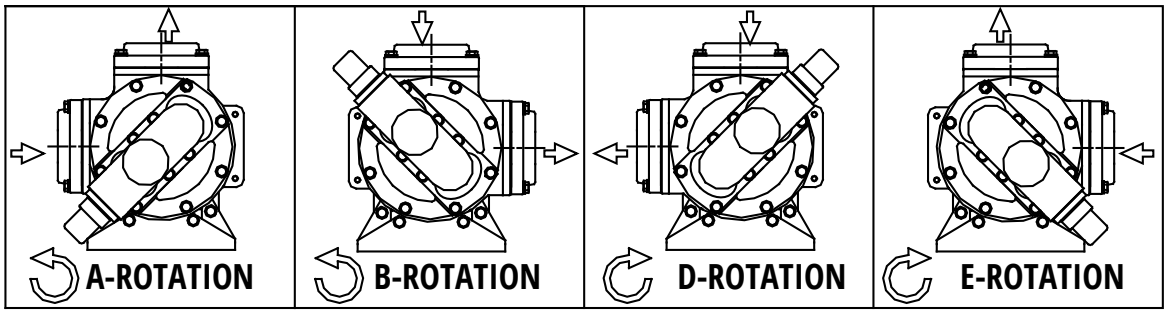


### Shaft Dimensions

| Shaft Design | K | R | T | L |
|---|---|---|---|---|
| Inch (") | 2.67 | 1.00 | 1/4 x 1/4 x 1.5 | 15.68 |
| Metric (mm) | 69.8 | 27 | 8 X 7 X 45 | 350 |

### Port Dimensions

| Port Type | B |
|---|---|
| 2" FNPT | 4.50" [114mm] |
| ANSI 125# /150# | 4.63" [118mm] |
| 2" ANSI 250# | 5.81" [148mm] |

### Back Pull-Out Dimensions

| Size | Min Spacer |
|---|---|
| GG080 | 2.80" [71mm] |
| GG090 | 3.08" [78mm] |

### Face Type

| | Size-Rating |
|---|---|
| Raised Face | 3" ANSI - 150# |
| | 2" - ANSI 250# |
| Flat Face | 3"- ANSI 125# |
| | 2" & 3" - ANSI 150# |
| | 2" - ANSI 250# |

## GG080 - GG090 with Side Ports (NPT & Flange) Mounting Dimensions

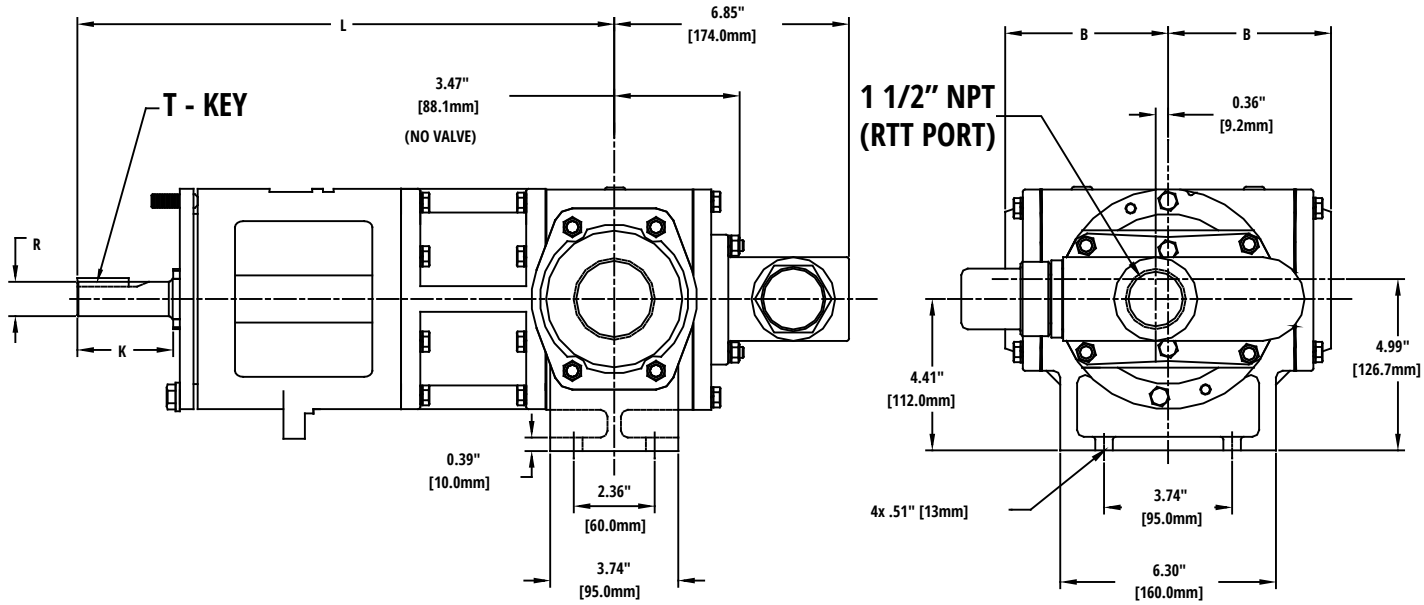


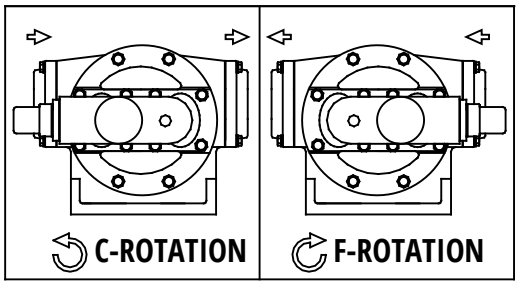


### Shaft Dimensions

| Shaft Design | K | R | T | L |
|---|---|---|---|---|
| Inch (") | 2.67 | 1.00 | 1/4 x 1/4 x 1.5 | 15.68 |
| Metric (mm) | 69.8 | 27 | 8 X 7 X 45 | 350 |

### Port Dimensions

| Port Type | B |
|---|---|
| FNPT (CI) | 4.74" [120mm] |
| ANSI 125# /150# | 4.87" [124mm] |
| 2" ANSI 250# / 300# | 6.05" [154mm] |
| 3" ANSI 250# / 300# | 5.24" [133mm] |

### Back Pull-Out Dimensions

| Size | Min Spacer |
|---|---|
| GG080 | 2.80" [71mm] |
| GG090 | 3.08" [78mm] |

### FF/RF

| | Size-Rating |
|---|---|
| Raised Face | 3" - ANSI 150# |
| | 3" - ANSI 250# / 300# |
| Flat Face | 2" - ANSI 125# thru 300# |
| | 3" - ANSI 125# |
| | 2" & 3" - ANSI 150# |
| | 2" - ANSI 250# |

**Note:** GG080 in Cast Iron or SS (Flanged only) GG090 CI only.

## GG120 - GG130 with Angle Ports (CI & SS Only) Mounting Dimensions

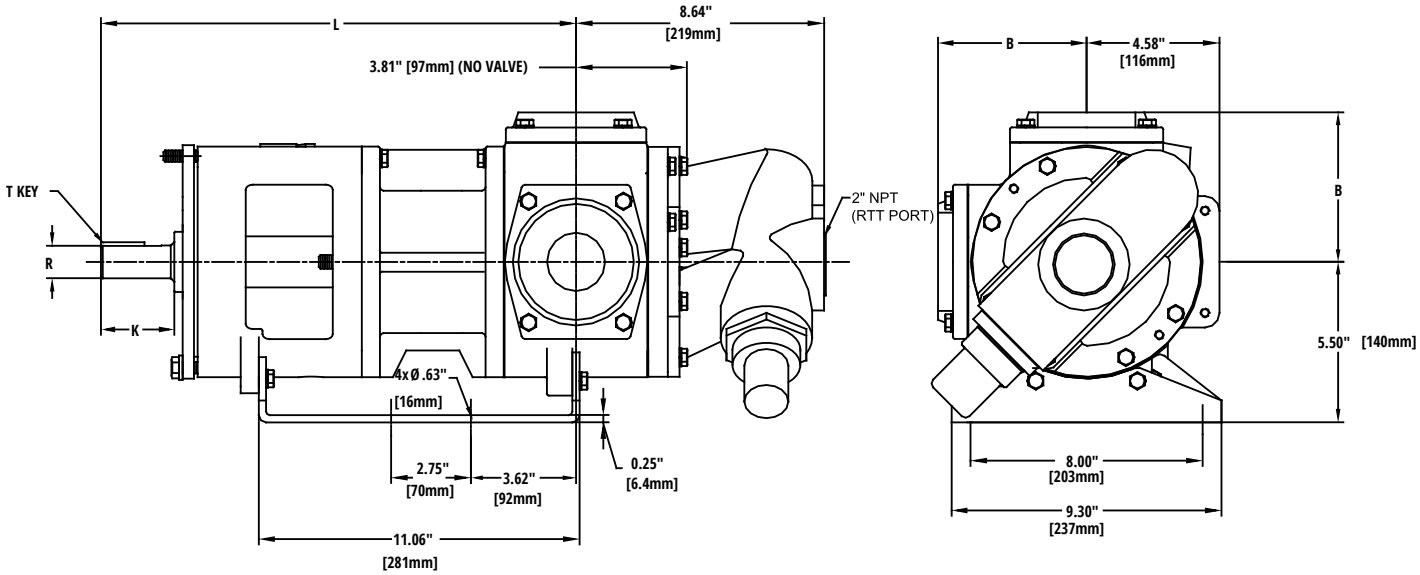


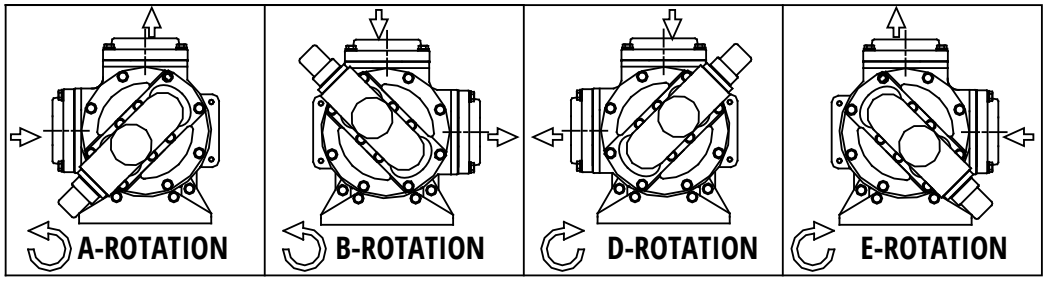


### Shaft Dimensions

| Shaft Design | K | R | T | L |
|---|---|---|---|---|
| Inch (") | 2.41 | 1.125 | 1/4 x 1/4 x 2 | 16.38 |
| Metric (mm) | 75 | 32 | 10 X 8 X 45 | 430 |

### Port Dimensions

| Port Type | B |
|---|---|
| 2" FNPT | 5.12" [130mm] |
| 2" ANSI 150# | 5.19" [132mm] |
| 3" ANSI 125# / 150# | 5.25" [133mm] |
| 3" ANSI 250# / 300# | 5.62" [143mm] |

### Back Pull-Out Dimensions

| Size | Min Spacer |
|---|---|
| GG120 | 3.31" [84 mm] |
| GG130 | 3.73" [95 mm] |

### Face Type

| | Size-Rating |
|---|---|
| Raised Face | 3"- ANSI 125#, 150#, & 250# |
| Flat Face | 2"- ANSI 150# |

## GG120 - GG130 with Side Ports (CI, SS, & CS) Mounting Dimensions

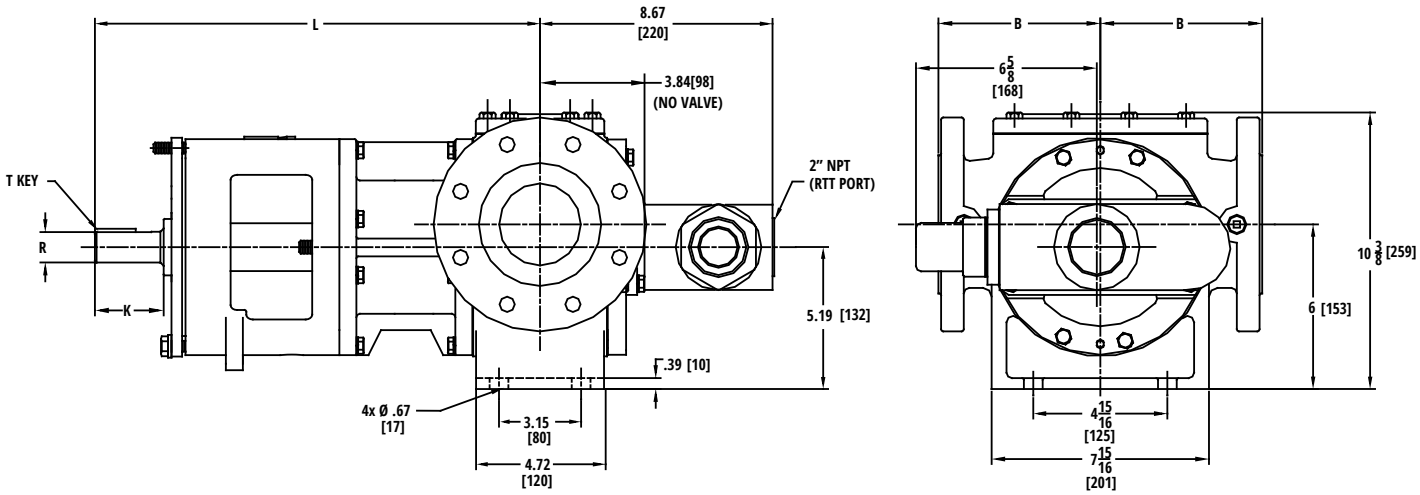


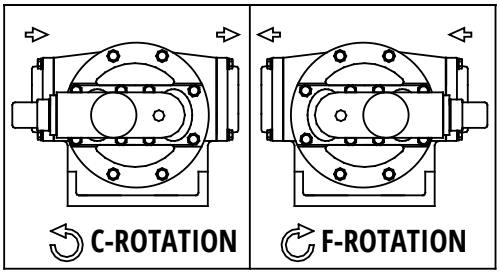


### Shaft Dimensions

| Shaft Design | K | R | T | L |
|---|---|---|---|---|
| Inch (") | 2.41 | 1.125 | 1/4 x 1/4 x 2 | 16.36 |
| Metric (mm) | 75 | 32 | 10 X 8 X 45 | 430 |

### Port Dimensions

| Port Type | B |
|---|---|
| 3" ANSI 125# (CI) | 5.95" [151mm] |
| 3" ANSI 150# (CS) | 5.87" [149mm] |
| 3" ANSI 300# (SS) | 6.22" [158mm] |

### Back Pull-Out Dimensions

| Size | Min Spacer |
|---|---|
| GG120 | 3.31" [84 mm] |
| GG130 | 3.73" [95 mm] |

### Face Type

| | Size-Rating |
|---|---|
| Raised Face | All |

## GG200 - GG210 with Angle Ports Mounting Dimensions

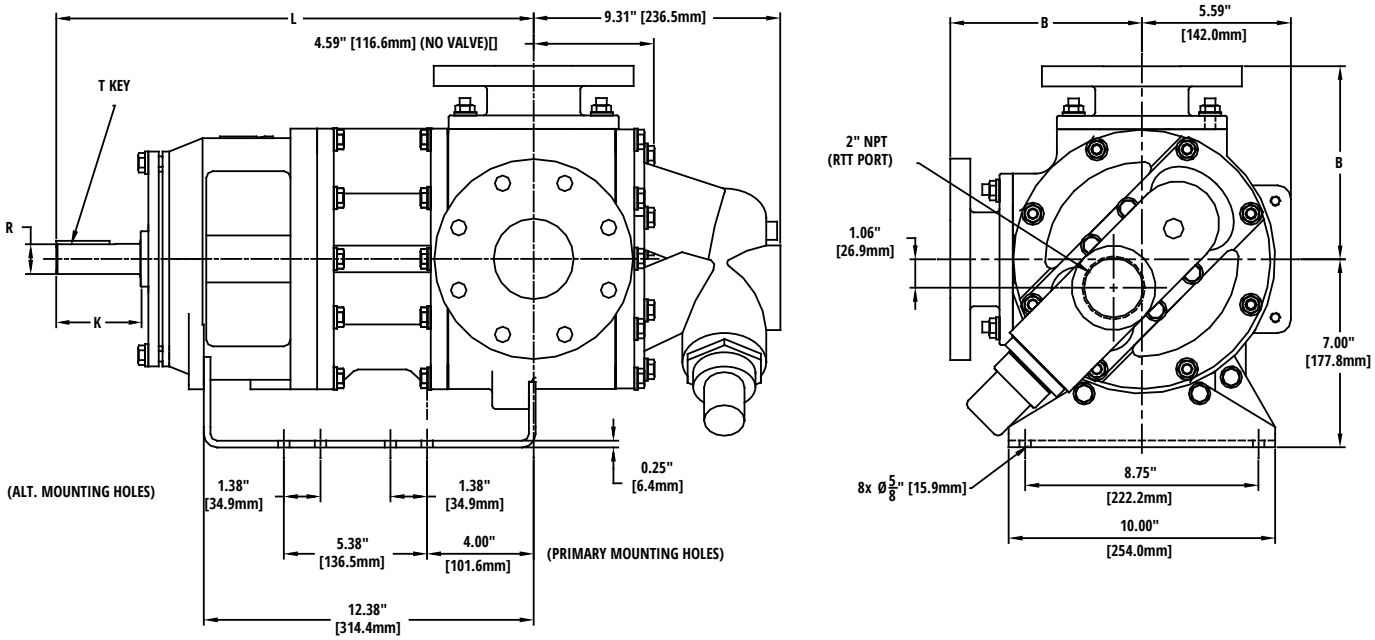


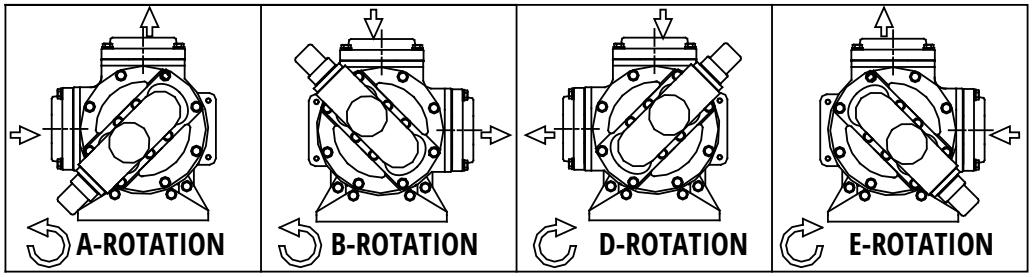


### Shaft Dimensions

| Shaft Design | K | R | T | L |
|---|---|---|---|---|
| Inch (") | 3.04 | 1.125 | 1/4 x 1/4 x 2 | 17.85 |
| Metric (mm) | 67 | 32 | 10 X 8 X 45 | 443 |

### Port Dimensions

| Port Type | B |
|---|---|
| 2" FNPT (200 Size only) | 6.56" [167mm] |
| ANSI flanged | 7.19" [183mm] |

### Back Pull-Out Dimensions

| Size | Min Spacer |
|---|---|
| GG200 | 4.01" [102mm] |
| GG210 | 4.61" [117mm] |

### Face Type

| | Size-Rating |
|---|---|
| Raised Face | 4"- ANSI 125# &150# |
| | 3"- ANSI 250# |
| | 4"- ANSI 250# (210 Size Only) |
| Flat Face | 2.5"- ANSI 125# (200 Size Only) |
| | 3"- ANSI 125# |

## GG200 - GG210 with Side Ports Mounting Dimensions

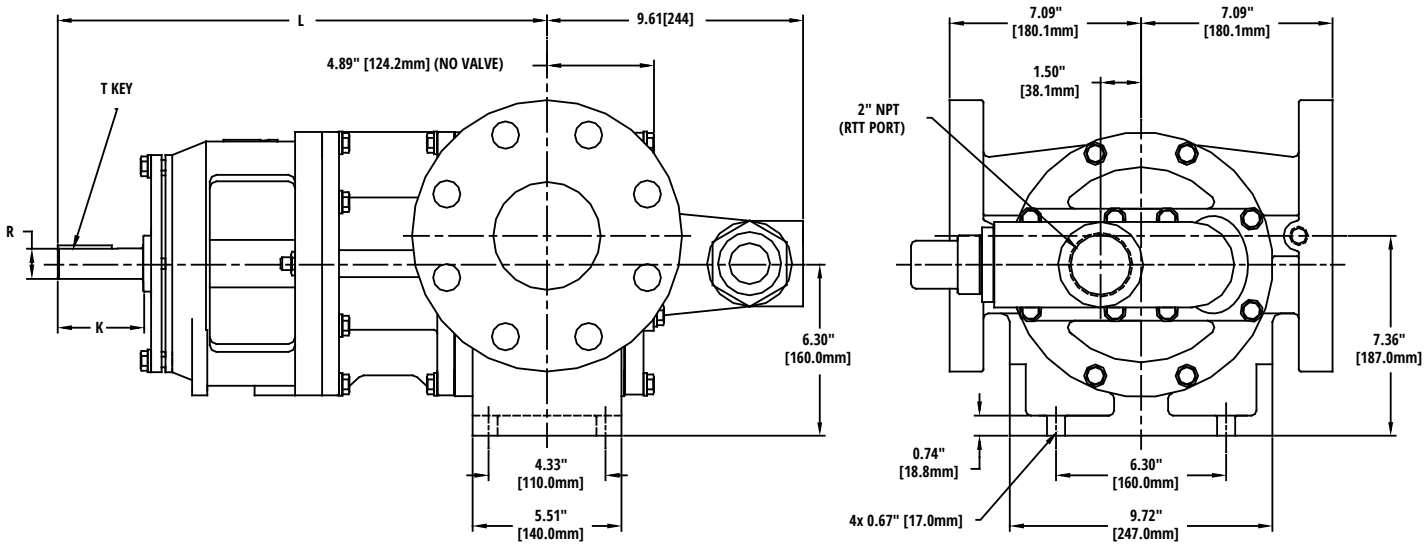


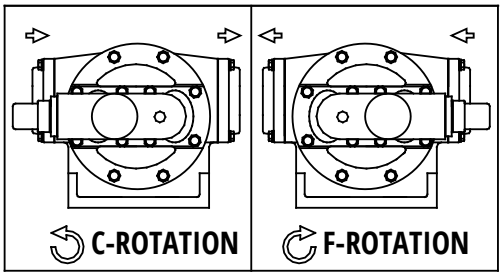


### Shaft Dimensions

| Shaft Design | K | R | T | L |
|---|---|---|---|---|
| Inch (") | 3.04 | 1.125 | 1/4 x 1/4 x 2 | 17.56 |
| Metric (mm) | 67 | 32 | 10 X 8 X 45 | 432 |

### Back Pull-Out Dimensions

| Size | Min Spacer |
|---|---|
| GG200 | 4.01" [102mm] |
| GG210 | 4.61" [117mm] |

### Face Type

| | Size-Rating |
|---|---|
| Flat Face | 4" - ANSI 125# |
| | 4" - ANSI 150# (210 Offered in SS) |

## GG250 with Angle Ports Mounting Dimensions

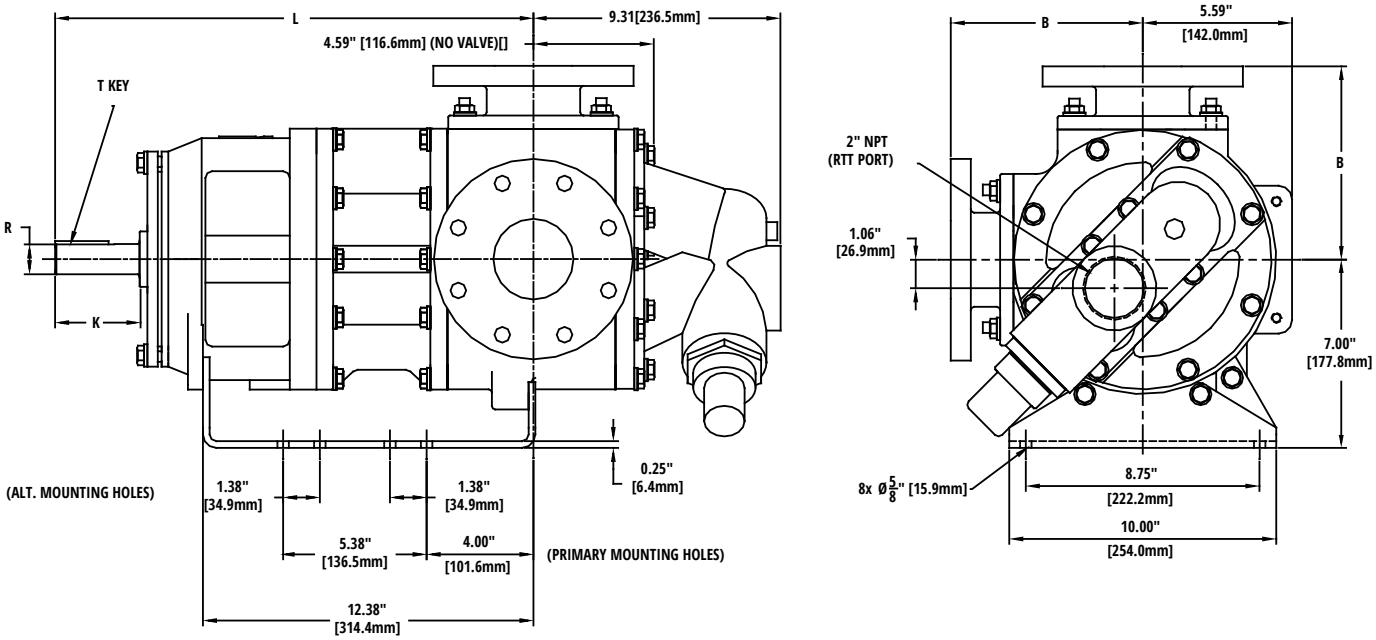


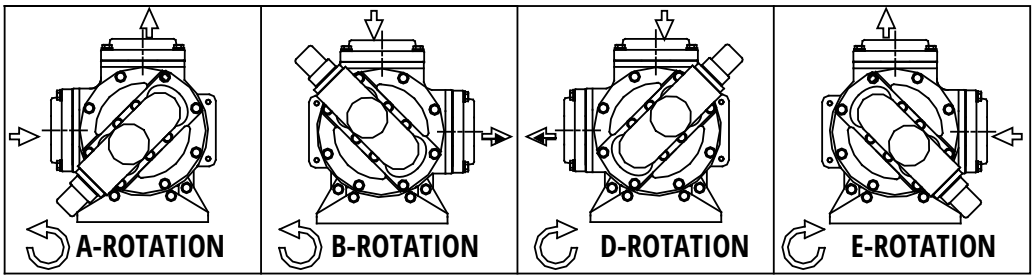


### Shaft Dimensions

| Shaft Design | K | R | T | L |
|---|---|---|---|---|
| Inch (") | 4.30 | 1.438 | 3/8 x 3/8 x 2.5 | 19.25 |
| Metric (mm) | 100 | 35 | 10 X 8 X 63 | 489 |

### Port Dimensions

| Port Type | B |
|---|---|
| ANSI flanged | 7.19" [183mm] |

### Back Pull-Out Dimensions

| Size | Min Spacer |
|---|---|
| GG250 | 4.73" [120mm] |

### Face Type

| | Size-Rating |
|---|---|
| Raised Face | 4"- ANSI 125#, 150#, & 250# |
| Flat Face | 3"- ANSI 125#, 150, & 250# |

## GG250 with Side Ports Mounting Dimensions

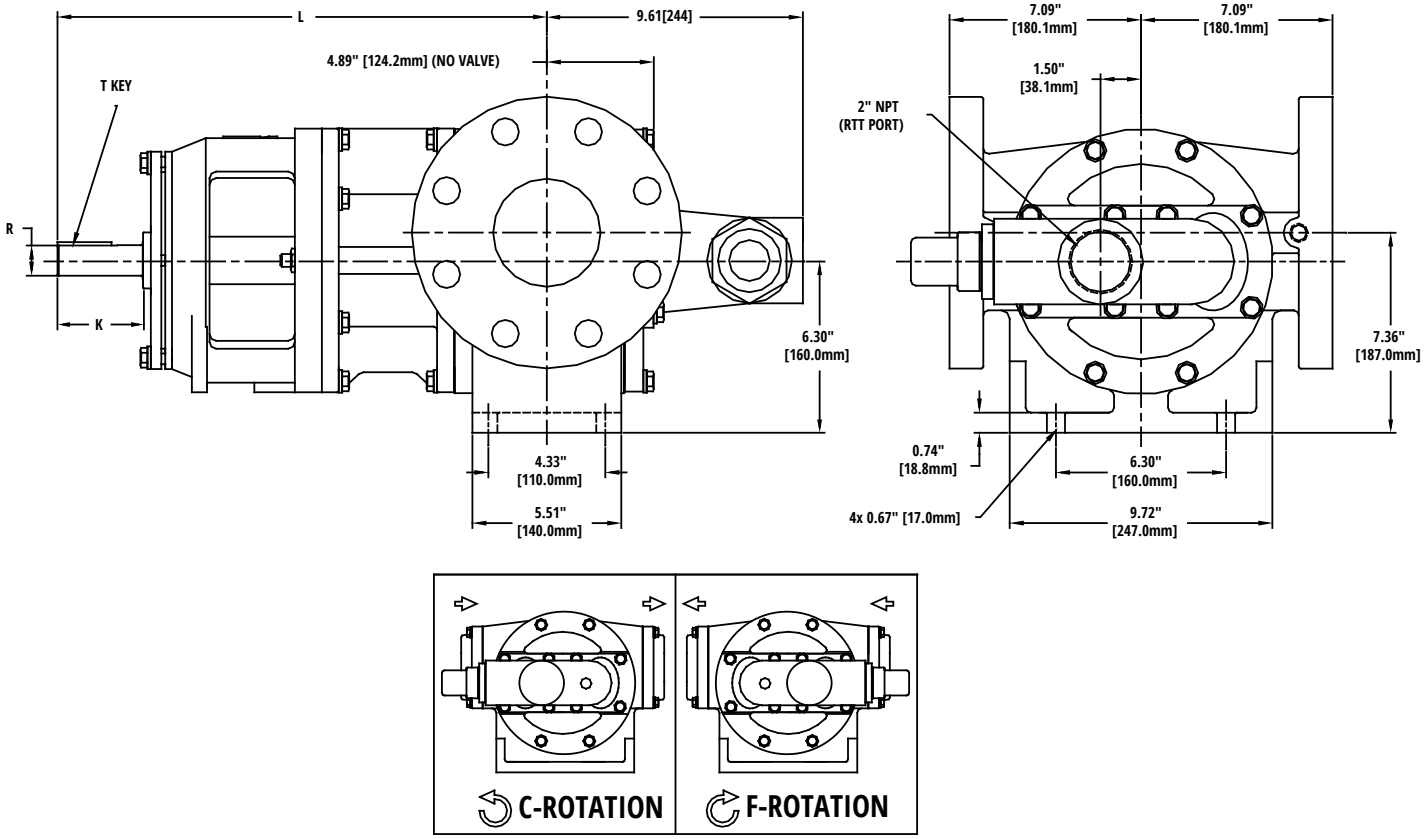


### Shaft Dimensions

| Shaft Design | K | R | T | L |
|---|---|---|---|---|
| Inch (") | 4.30 | 1.438 | 3/8 x 3/8 x 2.5 | 18.96 |
| Metric (mm) | 109 | 35 | 10 X 8 X 63 | 482 |

### Back Pull-Out Dimensions

| Size | Min Spacer |
|---|---|
| GG250 | 4.73" [120mm] |

### Face Type

| | Size-Rating |
|---|---|
| Flat Face | 4" - ANSI 125# thru 150# |

## GG550 with 6" Side Ports (CI, SS, & CS) Mounting Dimensions

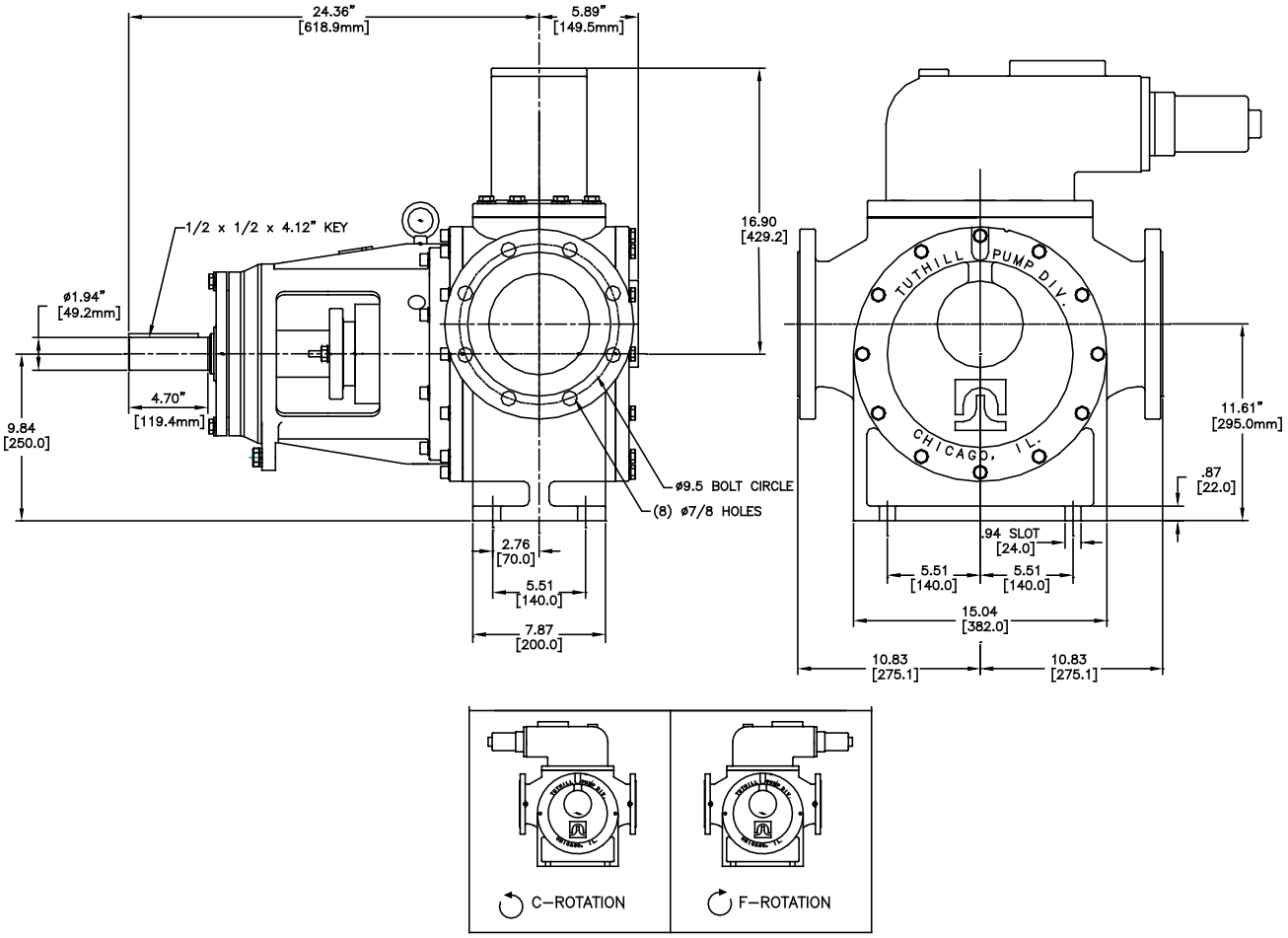


### Back Pull-Out Dimensions

| Size | Min Spacer |
|---|---|
| GG550 | 7.18" [182.4mm] |

### Face Type

| | Size-Rating |
|---|---|
| **Flat Face** | 6" - ANSI 125# & 150# |

## GG550 with 4" Angle Ports (CI Only) Mounting Dimensions

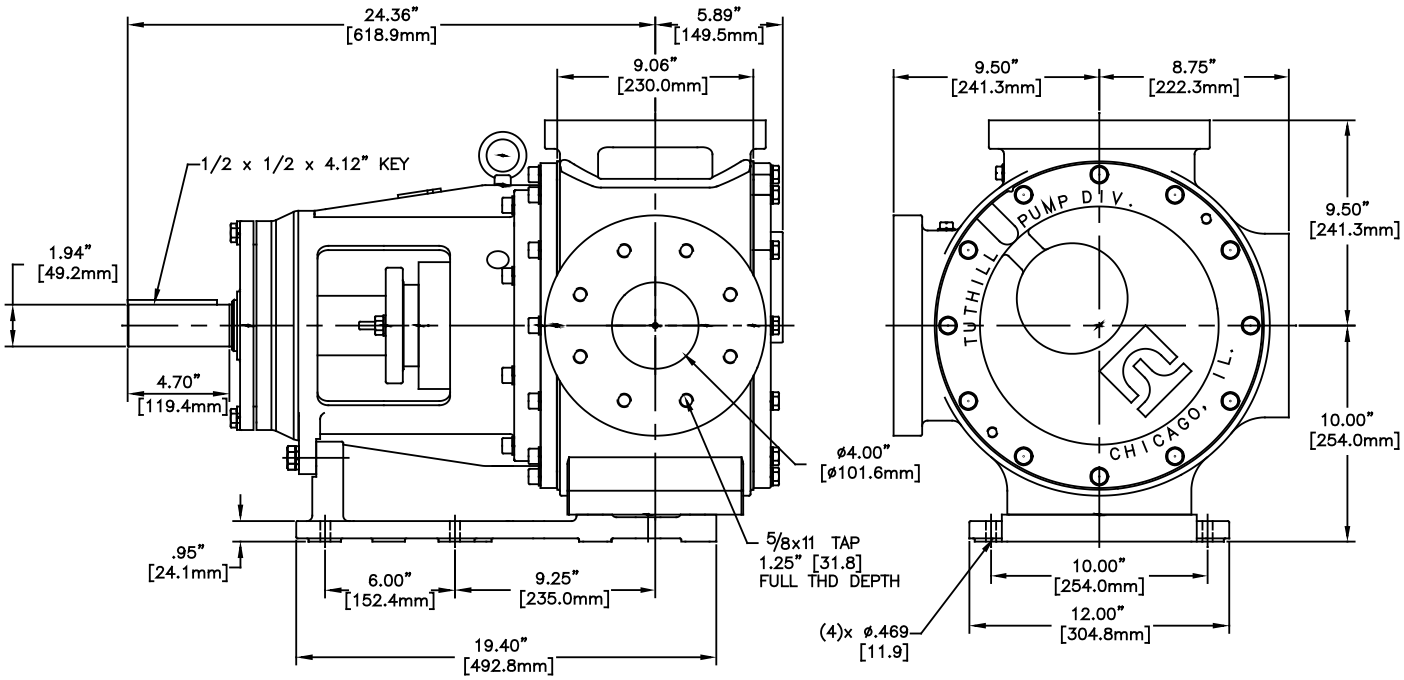


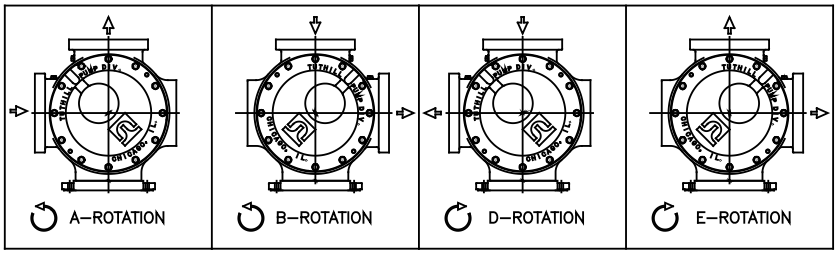


### Back Pull-Out Dimensions

| Size | Min Spacer |
|---|---|
| GG550 | 7.18" [182.4mm] |

### Face Type

| | Size-Rating |
|---|---|
| **Flat Face** | 4" - ANSI 125# & 250# |

# GlobalGear® Model Number System

| For Special Pumps with a Feature not Described Below | | | | | | |
|---|---|---|---|---|---|---|
| Pump Series | Pump Size | Material | Port Orientation | Special Indicator | Year of Design | Sequential Special Number |
| GG | 210 | I | A | - X | 01 | 56 |

| | Pump Series | | Pump Size | | | Material of Construction | Port Position & Rotation | Relief Valve | Sealing Method | Sealing Type | Seal Flush | Port Type | Port Size | Shaft Dimensions | Bushing Pin | Tutriding | Jackets | Clearances |
|---|---|---|---|---|---|---|---|---|---|---|---|---|---|---|---|---|---|---|
| | G | G | 2 | 1 | 0 | I | A | V | M | A | 1 | A | K | I | A | 0 | 0 | 0 |
| **Position** | 1 | 2 | 3 | 4 | 5 | 6 | 7 | 8 | 9 | 10 | 11 | 12 | 13 | 14 | 15 | 16 | 17 | 18 |

## Pos. 1 & 2 - Pump Series
GG = complete pump
GD = drive module

## Pos. 3, 4, & 5 - Pump Size
015 = nominal 15 GPM at 1800 RPM
030 = nominal 30 GPM at 1800 RPM
050 = nominal 50 GPM at 1500 RPM
070 = nominal 70 GPM at 1500 RPM
080 = nominal 80 GPM at 1500 RPM
090 = nominal 90 GPM at 1500 RPM
120 = nominal 120 GPM at 1200 RPM
130 = nominal 130 GPM at 1000 RPM
200 = nominal 200 GPM at 1000 RPM
210 = nominal 210 GPM at 800 RPM
250 = nominal 200 GPM at 640 RPM
550 = nominal 550 GPM at 500 RPM

## Pos. 6 - Material of Construction
I = iron
S = stainless steel
C = cast steel

## Pos. 7 - Port Position & Rotation

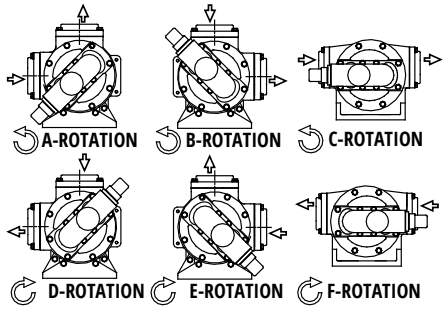


## Pos. 8 - Relief Valve
0 = none
V = internal

## Pos. 9 - Sealing Method
P = packing
I = IB mechanical seal (behind rotor)
M = OB mechanical seal (in stuffing box)
C = cartridge mechanical seal

## Pos. 10 - Seal Type
0 = no gland or packing
A = standard packing (graphite/PTFE)**
B = NI Resistant Type 2 Mechanical Seal
C = food-grade packing (pure PTFE)
E = Viton mechanical seal
F = PTFE mechanical seal
H = abrasion-resistant mech. seal (Viton)
L = gen. purp. single cartridge seal (<7,500 SSU)
M = hard face cartridge seal
N = process single cartridge seal (<75,000 SSU)
Q = Heavy Duty Slurry (Viton)
R = Heavy Duty Slurry (Chemraz)
T = TuffSeal cartridge lip seal (Viton O-rings)
K = Triple Lip - PMF PTFE - Viton
P = Hard Faces Cartridge Single Mech. Seal (Tungsten Carbide/Silicar - Viton) Quench Drain

## Pos. 11 - Seal Flush
0 = none
1 = internal vent to suction (Plan 13)

## Pos. 12 - Port Type
0 = none
A = FNPT
C = ANSI 125# flanged (C.I. only)
D = ANSI 150# flanged
E = ANSI 250# flanged (C.I. only)
F = ANSI 300# flanged

## Pos. 13 - Port Size
0 = none
H = 1-1/2" or 40mm
I = 2" or 50mm
J = 2-1/2" or 65mm
K = 3" or 80mm
L = 4" or 100mm
N = 6" or 150mm

## Pos. 14 - Shaft Dimensions
I = Inch seal & coupling

## Pos. 15 - Bushings & Pin
A = bronze idler & bracket
C = carbon idler, bronze bracket
D = carbon idler & bracket
E = hi-temp carbon idler & bracket
G = T.C. idler with T.C. pin, bronze bracket
I = T.C. idler & bracket with T.C. pin & hardened shaft

## Pos. 16 - Tutriding
0 = none
1 = Tutrided rotor head, idler, cover
2 = Tutrided rotor head, idler, cover, housing

## Pos. 17 - Jackets
0 = none
1 = cover only
2 = bracket only
3 = cover and bracket

## Pos. 18 - Clearances
0 = standard <7,500 SSU, -100° to 200°F
A = 7,500 to 75,000 SSU 200° to 300°F
B = 75,000 to 750,000 SSU
G = <7,500 SSU 300°F to 450°F (see note)
H = 450°F to 550°F (see note)
J = Chocolate Clearance Mods (Include Class B Clearance, Bronze Bushings, Root Drilled Idler & Drilled Rotor Head.)

Note: Pumps with G or H in this position include hi-temp package (paint, bearing & gaskets)

## Legend
■ = NOT AVAILABLE ON ALL SIZES
C.I. = Cast Iron
T.C. = Tungsten Carbide

## GlobalGear® Material of Construction

| Size | Port | CI | CS | SS | HG | CD |
|---|---|---|---|---|---|---|
| 015 | Angle | X | | X | X | X |
| | Side | X | | X | X | X |
| 030 | Angle | X | | X | X | X |
| | Side | X | X | X | X | X |
| 050 | Angle | X | | | X | X |
| | Side | X | | | X | X |
| 070 | Angle | X | | | X | X |
| | Side | X | | | X | X |
| 080 | Angle | X | | X | X | X |
| | Side | X | | X | X | X |
| 090 | Angle | X | | | X | X |
| | Side | X | | | X | X |
| 120 | Angle | X | | | X | X |
| | Side | X | | | X | X |
| 130 | Angle | X | | X | X | X |
| | Side | X | X | X | X | X |
| 200 | Angle | X | | | X | X |
| | Side | X | | | X | X |
| 210 | Angle | X | | X | X | X |
| | Side | X | | X | X | X |
| 250 | Angle | X | | X | X | X |
| | Side | X | X | X | X | X |
| 550 | Angle | X | | X | X | X |
| | Side | X | X | X | X | X |

| | | | | |
|---|---|---|---|---|
| **CI = Cast Iron** | **CS = Cast Steel** | **SS = Stainless Steal** | **HG = Heavy Gear** | **CD = Compressor Duty** |

## GlobalGear® Clearance Viscosity Limits

| Viscosity SSU | | | | | | | | | | | | |
|---|---|---|---|---|---|---|---|---|---|---|---|---|
| 750,000 | B | B | | | B | | | B | | B | B | B |
| 75,000 | A | A | | | A | | | A | | A | A | A |
| 7,500 | O | O | O | O | O | O | O | O | O | O | O | O |
| 0 | 015 | 030 | 050 | 070 | 080 | 090 | 120 | 130 | 200 | 210 | 250 | 550 |

## GlobalGear® Temperature Limits

| °F | Clearances | Pump Series | | | Bushings | | | | Seal Elastomers | | Packing | | HT Opts | °C |
|---|---|---|---|---|---|---|---|---|---|---|---|---|---|---|
| 600 | | Cast Iron Construction | Cast Steel Construction | | | HT Carbon Bushings | | | | | | | HT Ball Bearing, Gaskets, and Paint | 316 |
| 550 | Class H | | | | | | | | | | Standard Packing (PTFE/Graphite) | | | 288 |
| 500 | | | | Stainless Steel Construction | | | HT Tungsten Carbide Bushing (CI) | | | | | 475°F | | 260 |
| 450 | Class G | | | | Bronze Bushings | | | | | | | | | 232 |
| 400 | | | | | | Standard Carbon Bushings | | | | PTFE (See Note 3) | | | | 204 |
| 390 | | | | | | | | | | | | | | 199 |
| 380 | | | | | | | | | | | | | | 193 |
| 370 | | | | | | | | | | | | | | 188 |
| 365 | | | | | | | | | Viton | | | | | 185 |
| 360 | | | | | | | | | | | | | | 182 |
| 350 | | | | | | | | | | | | | | 177 |
| 300 | Class A | | | | | | | HT TC Bushs (SS) | | | | | Standard Ball Bearing, Gaskets, and Paint | 149 |
| 250 | | | | | | | | | | | | | | 121 |
| 200 | Class 0 | | | | | | Std. Tungsten Carbide Bushings (CI) | Std. Tungsten Carbide Bushing (SS) | | | | | | 93 |
| 150 | | | | | | | | | | | | | | 66 |
| 100 | | | | | | | | | | | | | | 38 |
| 50 | | | | | | | | | | | | | | 10 |
| 0 | | | | | | | | | | | | | | -18 |
| -10 | | | | | | | | | | | | | | -23 |
| -20 | | | | | | | | | | | | | | -29 |
| -30 | | | | | | | | | | | | | | -34 |
| -40 | | | | | | | | | | | | | | -40 |
| -50 | | | | | | | | | | | | | | -46 |
| -100 | | | | | | | | | | | | | | -73 |

**Notes:** 1. A pump's performance is dependent on more than just the temperature ranges of the component materials. 2. Pumps with extra clearances may have reduced flow rates when operated at lower temperatures. 3. Pumps with PTFE seals also have PTFE-encapsulated Viton O-rings which are limited to 400 °F (204 °C). Clearance Class J = Chocolate Clearance Mods (Include Class B Clearance, Bronze Bushings, Root Drilled Idler & Drilled Rotor Head.)

## GlobalGear® Materials of Construction

| Part Name | Material | Standard | Comments | Availability | | | Compressor Duty |
|---|---|---|---|---|---|---|---|
| | | | | GGI | GGS* | GGC* | |
| Housing, Cover | cast iron (CI) | ASTM A48 | | S | | | S |
| | Tutrided CI | ASTM A48 | surface hardened | O | | | |
| | stainless steel (SS) | ASTM A743, grade CF8M | cast version of 316 SS | | S | | |
| | cast steel (CS) | ASTM A216, grade WCB | | | | S | O |
| Bracket, Valve Body | cast iron (CI) | ASTM A48 | | S | | | S |
| | stainless steel (SS) | ASTM A743, grade CF8M | cast version of 316 SS | | S | | |
| | cast steel (CS) | ASTM A216, grade WCB | | | | S | |
| Valve Block-Off Plate | steel | AISI 1018 | no contact with pumpage | S* | S | S | |
| Rotor Head, Idler Gear | ductile iron (DI) | ASTM A536, grade 80-55-06 | | S | | S | S |
| | Tutrided DI | ASTM A536, grade 80-55-06 | surface hardened | O | | O | |
| | stainless steel (SS) | ASTM A494, grade CY5SnBiM | "Nitronic 60" | | S | | |
| Rotor Shaft | carbon steel (CS) | AISI 4140 | | S | | S | |
| | hardened steel | AISI 4140 | induction hardened | O | | O | S |
| | stainless steel (SS) | ASTM A564, grade 630 | "Armco 17-4PH" | | S | | |
| | hard-coated SS | ASTM A564, grade 630 | chrome oxide coated | | O | | |
| Idler Pin | hardened steel | AISI 1117 | case hardened | S | | S | |
| | stainless steel (SS) | ASTM A564, grade 630 | "Armco 17-4PH" | O | S | | |
| | tungsten carbide | grade C2 | | O | O | O | |
| Bushings | bronze | SAE CA932 | | S | | | |
| | standard carbon | carbon graphite resin | | O | S | S | S |
| | high-temp carbon | carbon graphite | | O | O | O | |
| | tungsten carbide | grade C2 | | O | O | O | |
| Gaskets | standard | fiber with nitrile binder | "Garlock" Style 3000 | S | | | |
| | high-temp | graphite/316 SS | "Garlock" Style 3125TC/SS | O | S | S | |
| Bearing Carrier | cast iron (CI) | ASTM A48 | no contact with pumpage | S | S | S | |
| Cover Jacket | ductile iron (DI) | ASTM A536, grade 80-55-06 | no contact with pumpage | O | O | | |
| Jacketed Bracket | cast iron (CI) | ASTM A48 | | O* | | | |
| | stainless steel (SS) | ASTM A276, grade 316 | | | O | | |

| Availability Codes | Pump Models |
|---|---|
| S= Standard material for this pump series | GGI= GlobalGear®, Iron |
| O= Optional material for this pump series | GGS= GlobalGear®, Stainless Steel |
| * Not available with GG550 pumps | GGC= GlobalGear®, Cast Steel |
| Relief valves not available with GG550 angle ported pumps | Compressor Duty: Stadard Viton O-ring |

## GlobalGear® Standard Seal Specifications (GG015 – GG030)

### Mechanical Seals for 1 1/8" Shaft

| Seal Description | Part Number | Vendor | Seal Type | Material of Construction | | | |
|---|---|---|---|---|---|---|---|
| | | | | Secondary Seal | Rotary Face | Stationary Face | Wetted Hardware |
| (E) Viton Mechanical Seal (Viton, carbon vs. ceramic) | G015UI9-21-E | FC | 21 | Viton® | Carbon | Ceramic | 304 S.S. |
| (F) PTFE Mechanical Seal (PTFE, carbon vs. ceramic) | G015UI9-9T-F | FC | 9T | PTFE | Carbon | Ceramic | 304 S.S. |
| (H)Abrasion-Resistant Mech Seal (Viton, SiC vs. SiC) | G015UI9-31-H | FC | 31 | Viton | Silicon Carbide | Silicon Carbide | 304 S.S. |
| (L) General Purpose Single Cartridge Mech. Seal | G015UI9-91GP-L | FC | 91 | Viton | Silicon Carbide | Carbon | 302 S.S. |
| (T) Cartridge Lip Seal | G015UI9-4422-T | FC | 122 | Viton | Silicon Carbide | Filled PTFE | 316 S.S. |
| (Q) Heavy Duty Slurry Seal (Viton) | G015UI9-FLDL-82 | FC | 82 | Viton | Tungsten Carbide | Silicon Carbide | 416 S.S. |
| (R) Heavy Duty Slurry Seal (Chemraz) | G015UI9-FLDL-82C | FC | 82 | Chemraz | Tungsten Carbide | Silicon Carbide | 416 S.S. |
| (P) Hard Face Cartridge Single Seal TC vs. SiC Faces, Viton, & Quench Gland | G015UI9-5610-P | FC | 5610 | Viton | Tungsten Carbide | Silicon Carbide | 316 S.S. |

| Packing Description | Part Number | Vendor | Packing Style | Material Description |
|---|---|---|---|---|
| (A) Standard Packing (graphite/PTFE) | G015II94 | FC | ML4002 or ML8002 | Braided PTFE with graphite impregnation. |
| (C) Food-Grade Packing (PTFE) | G015II94-FG | FC | ML2236FDA | Braided pure PTFE. FDA approved. |

**Viton®-Registered trademark of DuPont De Nemours & Company/Gylon®-Registered trademark of Garlock, Inc./FC=Factory Choice (Flowserve, Fluidol, John Crane, Sepco)**

## Mechanical Seals for 28mm Shaft

| Seal Description | Part number | Vendor | Seal Type | Material of Construction | | | |
|---|---|---|---|---|---|---|---|
| | | | | Secondary Seal | Rotary Face | Stationary Face | Hardware |
| (E) Viton Mechanical Seal (Viton, carbon vs. ceramic) | G015UM9-21-E | FC | 52 | Viton | Carbon | Silicon Carbide | 316 S.S. |
| (F) PTFE Mechanical Seal (PTFE, carbon vs. ceramic) | G015UM9-9T-F | FC | 9T | PTFE | Carbon | Silicon Carbide | 316 S.S. |
| (H) Abrasion-Resistant Mech. Seal (Viton, SiC vs. SiC) | G015UM9-31-H | FC | 52 | Viton | Silicon Carbide | Silicon Carbide | 316 S.S. |
| (I) Viton Cartridge Single Mech. Seal (Viton, carbon vs. silicon carbide) | G015UM9-ISC-I | FC | ISC1PX | Viton | Carbon | Silicon Carbide | 316 S.S. |
| (J) Viton Cartridge Double Mech. Seal (Viton, carbon vs. silicon carbide) | G015UM9-ISC-J | FC | ISCX2PP | Viton | Carbon | Silicon Carbide | 316 S.S. |
| (K) Triple Lip Cartridge Seal | G015UM9-PSII-K | FC | P/S-II | Viton | Gylon (lip seals) | Silicon Carbide | 316 S.S. |

## Packings for 1 1/8" (or 28mm) Shaft

| Packing Description | Part number | Vendor | Packing Style | Material Description |
|---|---|---|---|---|
| (A) Standard Packing (graphite/PTFE) | G015UU94 | FC | ML4002 or ML8002 | Braided PTFE with graphite impregnation. |
| (C) Food-Grade Packing (PTFE) | G015UU94-FG | FC | ML2236FDA | Braided pure PTFE. FDA approved. |

**Viton®-Registered trademark of DuPont De Nemours & Company/Gylon®-Registered trademark of Garlock, Inc./FC=Factory Choice (Flowserve, Fluidol, John Crane, Sepco)**

## GlobalGear® Standard Seal Specifications (GG050 – GG090)

### Mechanical Seals for 1 3/8" Shaft

| Seal Description | Part Number | Vendor | Seal Type | Material of Construction | | | |
|---|---|---|---|---|---|---|---|
| | | | | Secondary Seal | Rotary Face | Stationary Face | Wetted Hardware |
| (E) Viton Mechanical Seal (Viton, carbon vs. ceramic) | G050UI9-21-E | FC | 21 | Viton | Carbon | Ceramic | 304 S.S. |
| (F) PTFE Mechanical Seal (PTFE, carbon vs. ceramic) | G050UI9-9T-F | FC | 9T | PTFE | Carbon | Ceramic | 304 S.S. |
| (H) Abrasion-Resistant Mech Seal (Viton, SiC vs. SiC) | G050UI9-31-H | FC | 31 | Viton | Silicon Carbide | Silicon Carbide | 304 S.S. |
| (L) General Purpose Single Cartridge Mech. Seal | G050UI9-91GP-L | FC | 91 | Viton | Silicon Carbide | Cardon | 302 S.S. |
| (T) Cartridge Lip Seal | G050UI9-4422-T | FC | 122 | Viton | Silicon Carbide | Filled PTFE | 316 S.S. |
| (Q) Heavy Duty Slurry Seal (Viton) | G050UI9-FLDL-82 | FC | 82 | Viton | Tungsten Carbide | Silicon Carbide | 416 S.S. |
| (R) Heavy Duty Slurry Seal (Chemraz) | G050UI9-FLDL-82C | FC | 82 | Chemraz | Tungsten Carbide | Silicon Carbide | 416 S.S. |
| (P) Hard Face Cartridge Single Seal TC vs. SiC Faces, Viton, & Quench Gland | G050UI9-5610-P | FC | 5610 | Viton | Tungsten Carbide | Tungsten Carbide | 316 S.S. |
| | | | | | **Lips** | **Sleeve** | **Hardware** |
| (K) Triple Lip PMF-PTFE Viton | G050UI9-4232-K | FC | 42 | Viton | Filled PTFE | Tungsten Carbide | 316 S. S. |

| Packing Description | PartNumber | Vendor | Packing Style | Material Description |
|---|---|---|---|---|
| (A) Standard Packing (graphite/PTFE) | G050II94 | FC | ML4002 or ML8002 | Braided PTFE with graphite impregnation. |
| (C) Food-Grade Packing (PTFE) | G050II94-FG | FC | ML2236FDA | Braided pure PTFE. FDA approved. |

**Viton®-Registered trademark of DuPont De Nemours & Company/Gylon®-Registered trademark of Garlock, Inc./FC=Factory Choice (Flowserve, Fluidol, John Crane, Sepco)**

## GlobalGear® Standard Seal Specifications (GG120 – GG250)

### Mechanical Seals for 1 3/4" Shaft

| Seal Description | Part Number | Vendor | Seal Type | Material of Construction | | | |
|---|---|---|---|---|---|---|---|
| | | | | Secondary Seal | Rotary Face | Stationary Face | Wetted Hardware |
| (E) Viton Mechanical Seal (Viton, carbon vs. ceramic) | G120UI9-21-E | FC | 21 | Viton® | Carbon | Ceramic | 304 S.S. |
| (F) PTFE Mechanical Seal (PTFE, carbon vs. ceramic) | G120UI9-9T-F | FC | 9T | PTFE | Carbon | Ceramic | 304 S.S. |
| (H)Abrasion-Resistant Mech Seal (Viton, SiC vs. SiC) | G120UI9-31-H | FC | 31 | Viton | Silicon Carbide | Silicon Carbide | 304 S.S. |
| (L) General Purpose Single Cartridge Mech. Seal | G120UI9-91GP-L | FC | 91 | Viton | Silicon Carbide | Carbon | 302 S.S. |
| (T) Cartridge Lip Seal | G120UI9-4422-T | FC | 122 | Viton | Silicon Carbide | Filled PTFE | 316 S.S. |
| (Q) Heavy Duty Slurry Seal (Viton) | G120UI9-FLDL-82 | FC | 82 | Viton | Tungsten Carbide | Silicon Carbide | 416 S.S. |
| (R) Heavy Duty Slurry Seal (Chemraz) | G120UI9-FLDL-82C | FC | 82 | Chemraz | Tungsten Carbide | Silicon Carbide | 416 S.S. |
| (P) Hard Face Cartridge Single Seal TC vs. SiC Faces, Viton, & Quench Gland | G120UI9-5610-P | FC | 5610 | Viton | Tungsten Carbide | Silicon Carbide | 316 S.S. |
| | | | | | **Lips** | **Sleeve** | **Hardware** |
| (K) Triple Lip PMF-PTFE Viton | G120UI9-4232-K | FC | 42 | Viton | Filled PTFE | Silicon Carbide | 316 S. S. |

| Packing Description | PartNumber | Vendor | Packing Style | Material Description |
|---|---|---|---|---|
| (A) Standard Packing (graphite/PTFE) | G120II94 | FC | ML4002 or ML8002 | Braided PTFE with graphite impregnation. |
| (C) Food-Grade Packing (PTFE) | G120II94-FG | FC | ML2236FDA | Braided pure PTFE. FDA approved. |

**Viton®-Registered trademark of DuPont De Nemours & Company/Gylon®-Registered trademark of Garlock, Inc./FC=Factory Choice (Flowserve, Fluidol, John Crane, Sepco)**

## GlobalGear® Standard Seal Specifications (GG550)

### Mechanical Seals for 2 3/4" Shaft

| Seal Description | Part Number | Vendor | Seal Type | Material of Construction | | | |
|---|---|---|---|---|---|---|---|
| | | | | Secondary Seal | Rotary Face | Stationary Face | Wetted Hardware |
| (F) PTFE Mechanical Seal (PTFE, carbon vs. ceramic) | G500UI9-9T-F | FC | 9T | PTFE | Carbon | Ceramic | 316 S.S. |
| (L) General Purpose Single Cartridge Mech. Seal | G500UI9-4610-L | FC | 4610 | Viton | Carbon | Silicon Carbide | 316 S.S. |
| (T) Cartridge Lip Seal | G500UI9-4422-T | FC | 122 | Viton | Silicon Carbide | Filled PTFE | 316 S.S. |
| (Q) Heavy Duty Slurry Seal (Viton) | G500UI9-FLDL-82 | FC | 82 | Viton | Tungsten Carbide | Silicon Carbide | 416 S.S. |
| (P) Hard Face Cartridge Single Seal TC vs. SiC Faces, Viton, & Quench Gland | G500UI9-5610-P | FC | 5610 | Viton | Tungsten Carbide | Silicon Carbide | 316 S.S. |
| | | | | | **Lips** | **Sleeve** | **Hardware** |
| (K) Triple Lip PMF-PTFE Viton | G500UI9-4232-K | FC | 42 | Viton | Filled PTFE | Silicon Carbide | 316 S.S. |

| Packing Description | PartNumber | Vendor | Packing Style | Material Description |
|---|---|---|---|---|
| (A) Standard Packing (graphite/PTFE) | G500II94 | FC | ML4002 or ML8002 | Braided PTFE with graphite impregnation. |
| (C) Food-Grade Packing (PTFE) | G500II94-FG | FC | ML2236FDA | Braided pure PTFE. FDA approved. |

**Viton®-Registered trademark of DuPont De Nemours & Company/Gylon®-Registered trademark of Garlock, Inc./FC=Factory Choice (Flowserve, Fluidol, John Crane, Sepco)**

## GlobalGear® Seal Chamber Dimensions Mech Seal (Inboard Location, Inch Shaft)

| Dimension | | GG015/030 | "GG050/070/080/090" | GG120/130 | GG200/210/250 | GG550 |
|---|---|---|---|---|---|---|
| Shaft Diameter | - | 1.125" | 1.375" | 1.75" | 1.75" | N/A |
| Chamber Diameter | D1 | 2.000" | 2.313" | 2.750" | 2.750" | |
| Seal Working Length (std. gland) | L1 | 1.490" | 1.562" | 1.875" | 1.875" | |
| Seal Working Length (opt. gland) | L1 | 1.440" | 1.812" | n/a | n/a | |
| Seat Bore Diameter | D2 | 1.75" | 2.000" | 2.500" | 2.500" | |
| Seat Bore Length (min) | L2 | 0.437 | 0.398" | 0.50" | 0.50" | |
| Optional Gland Pin | D3 | 0.125" | 0.125" | 0.125" | 0.125" | |
| | R3 | 0.75" | 0.86" | 1.17" | 1.17" | |
| | H3 | 0.08" | 0.08 | 0.18" | 0.18" | |

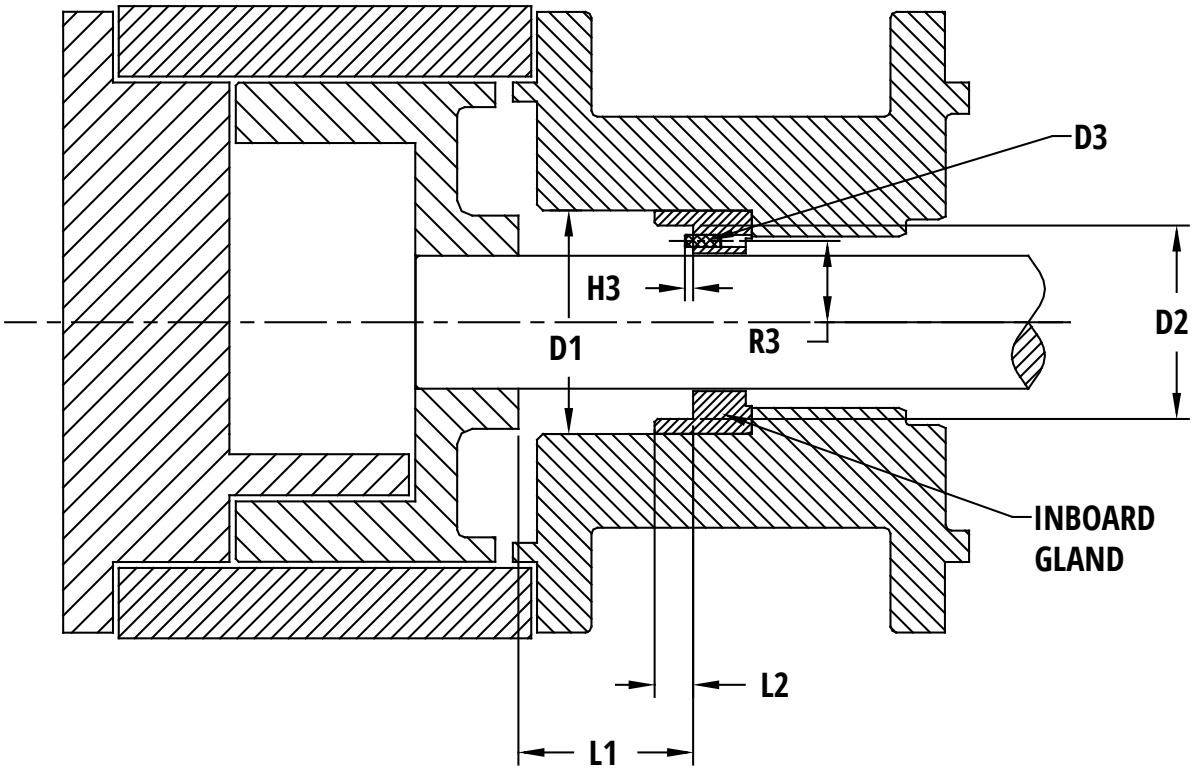

## GlobalGear® Seal Chamber Dimensions Mech Seal (Outboard Location, Inch Shaft)

| Dimension | | GG15/30 | "GG50/70/80/90" | GG120/130 | GG200/210/250 | GG550 |
|---|---|---|---|---|---|---|
| **Shaft Diameter** | **-** | 1.125" | 1.375" | 1.750" | 1.750" | 2.75" |
| **Bolt Size** | **-** | 4 x M10 | 2 x M10 | 2 x M12 | 2 x M12 | 2 x M12 |
| **Bolt Circle** | **-** | 3.13" | 3.35" | 4.25" | 4.25" | 5.90" |
| **Chamber Diameter** | **D1** | 2.000" | 2.313" | 2.750" | 2.750" | 4.50" |
| **Seal Working Length (std. gland)** | **L1** | 1.490" | 1.562" | 1.860" | 1.860" | 2.630" |
| **Seal Working Length (opt. gland)** | **L1** | 1.440" | 1.812" | n/a | n/a | n/a |
| **Seat Bore Diameter** | **D2** | 1.750" | 2.000" | 2.500" | 2.500" | 3.500" |
| **Seat Bore Length (min.)** | **L2** | 0.616" | 0.437" | 0.50" | 0.50" | 0.55" |
| **Optional Gland Pin** | **D3** | 0.125" | 0.125" | 0.125" | 0.125" | 0.125" |
| | **R3** | 0.75" | 0.86" | 1.13" | 1.13" | 1.54" |
| | **H3** | 0.08" | 0.08" | 0.12" | 0.12" | 0.094" |
| **Chamber Depth to Pin Hole** | **L3** | 1.26" | 1.77" | 1.89" | 1.89" | n/a |
| **Pin Hole Dia.** | **D4** | 0.13" | 0.13" | 0.13" | 0.13" | n/a |

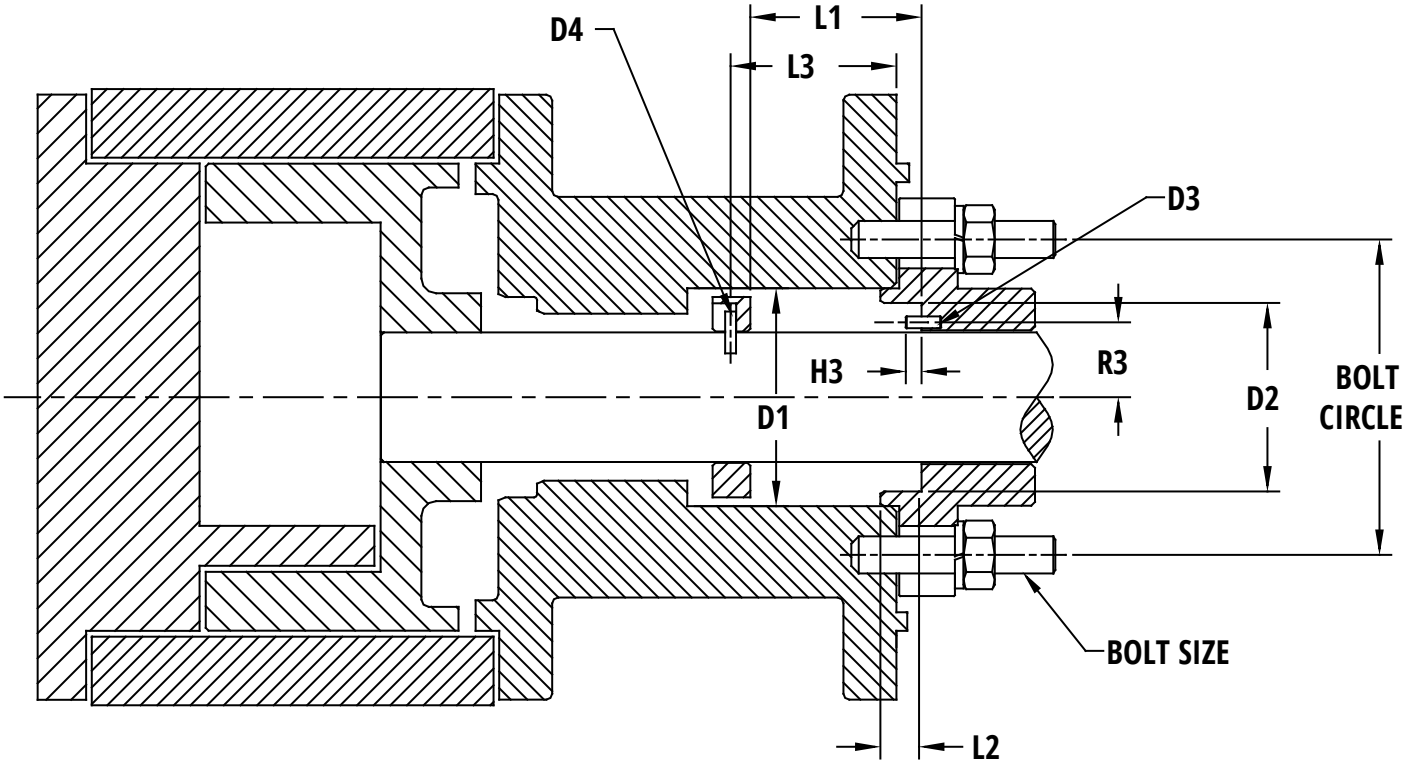

## GlobalGear® Seal Chamber Dimensions Packing

| Dimension (Inch Shaft) | | GG15/30 | "GG50/70/80/90" | GG120/130 | GG200/210/250 | GG550 |
|---|---|---|---|---|---|---|
| **Shaft Diameter** | **-** | 1.125" | 1.375" | 1.750" | 1.750" | 2.75" |
| **Bolt Size** | **-** | 4 x M10 | 2 x M10 | 2 x M12 | 2 x M12 | 2 x M12 |
| **Bolt Circle** | **-** | 3.13" | 3.35" | 4.25" | 4.25" | 5.90" |
| **Chamber Diameter** | **D1** | 2.000" | 2.313" | 2.750" | 2.750" | 3.78" |
| **Chamber Length** | **W1** | 1.69" | 2.22" | 2.43" | 2.43" | 2.95" |
| **Gland Length** | **W3** | 0.64" | 0.82" | 0.68" | 0.68" | 1.14" |

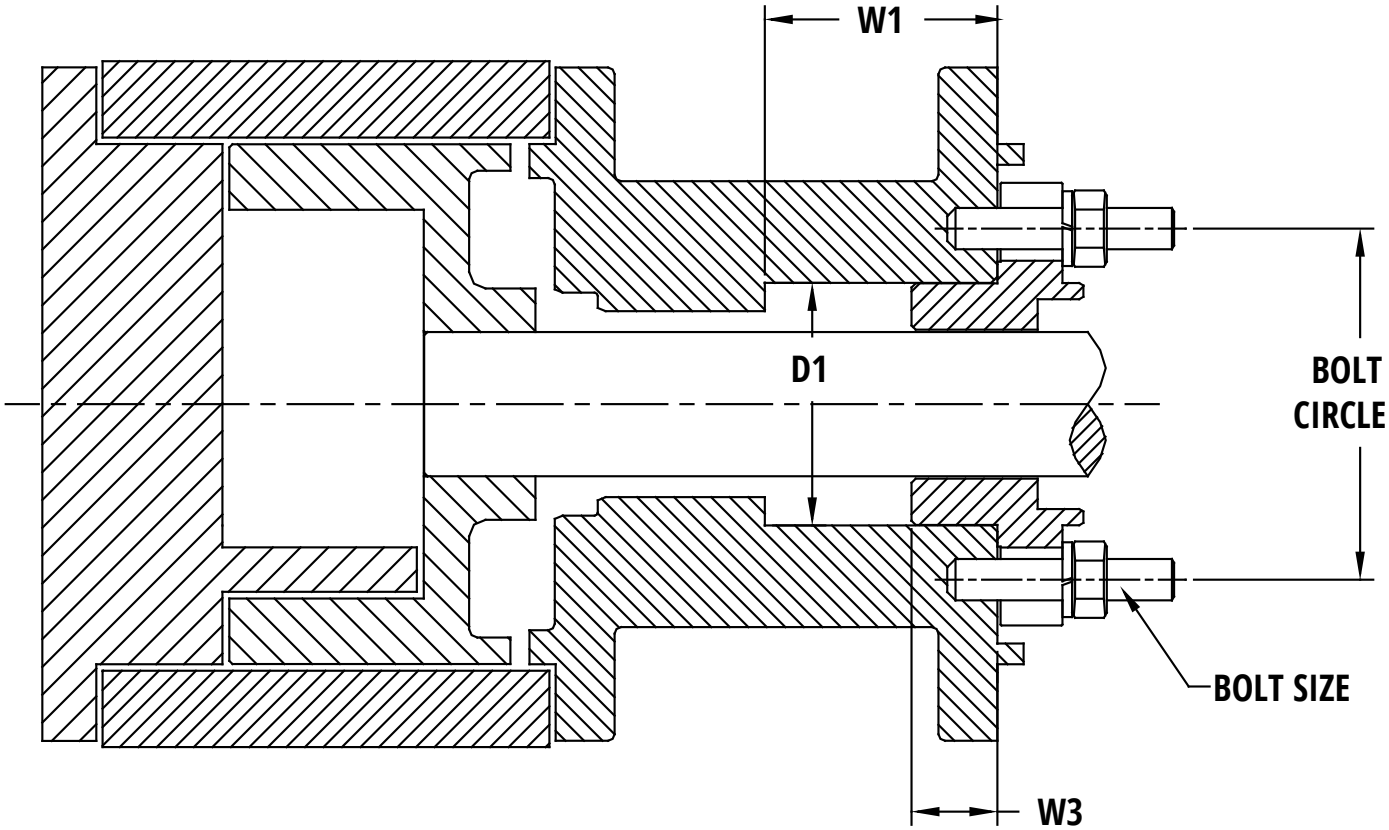

## GlobalGear® Seal Chamber Dimensions Cartridge Seal

| Dimension (Inch Shaft) | | GG15/30 | "GG50/70/80/90" | GG120/130 | GG200/210/250 | GG550 |
|---|---|---|---|---|---|---|
| **Shaft Diameter** | **-** | 1.125" | 1.375" | 1.750" | 1.750" | 2.750" |
| **Bolt Size** | **-** | 4 x M10 | 2 x M10 | 2 x M12 | 2 x M12 | 2 x M14 |
| **Bolt Circle** | **-** | 3.13" | 3.35" | 4.25" | 4.25" | 5.906" |
| **Chamber Diameter** | **D1** | 2.000" | 2.313" | 2.750" | 2.750" | 3.78" |
| **Chamber Length** | **W1** | 1.69" | 2.22" | 2.43" | 2.43" | 2.95" |
| **Max Seal Diameter** | **D4** | 3.75" | 4.88" | 5.60" | 5.75" | ----- |
| **Max Seal Length** | **L4** | 2.95" | 2.62" | 4.40" | 4.40" | 4.66 |
| **Gland Obstruction Diameter** | **D6** | 2.87" | 4.56" | 5.65" | 5.75" | ----- |
| **Gland Obstruction Length** | **L6** | 0.25" | 0.25" | 0.44" | 0.44" | ----- |
| **Chamber Depth to Pin Hole** | **L7** | 1.26" | 1.77" | 1.89" | 1.89" | ----- |
| **Pin Hole Dia.** | **D7** | 0.13" | 0.13" | .13" | .13" | ----- |

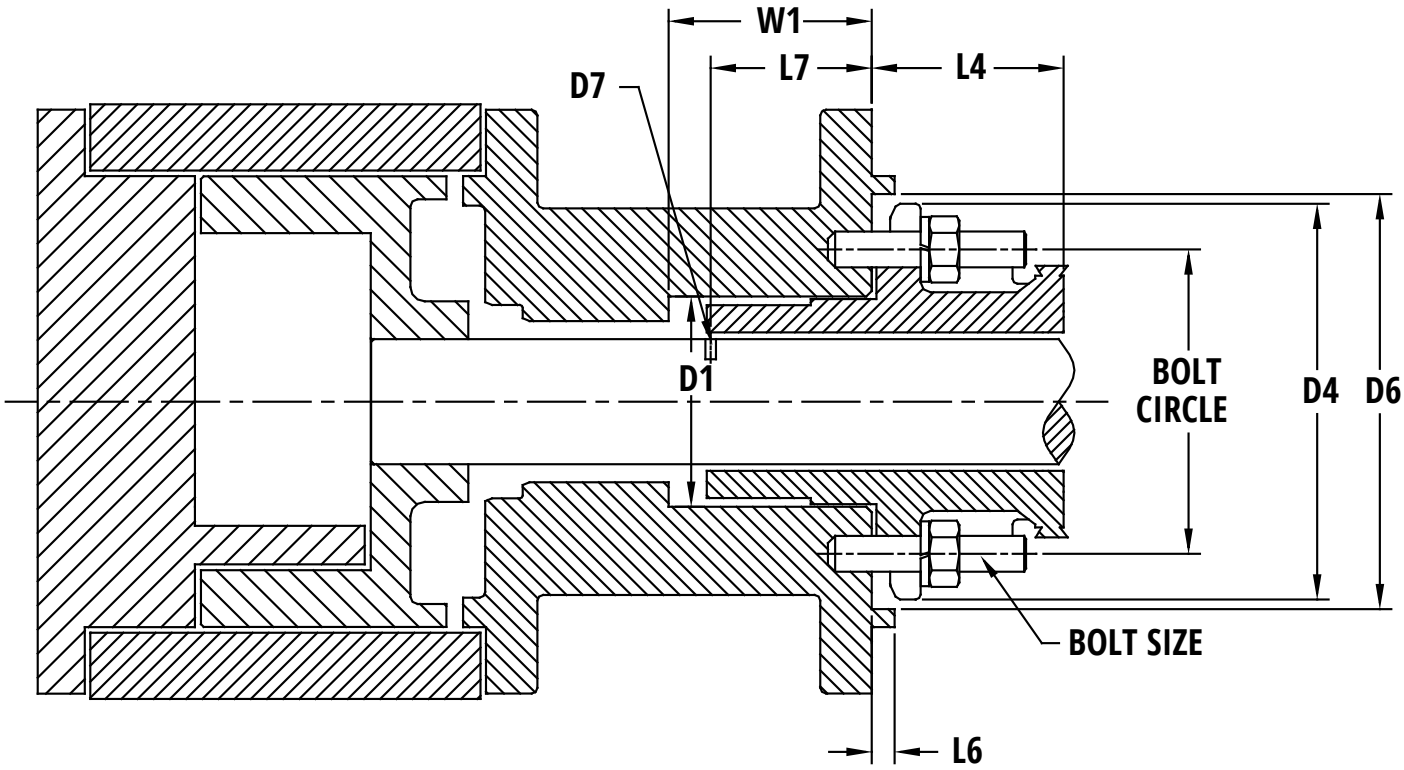

## GlobalGear® Jackets Data & Dimensions

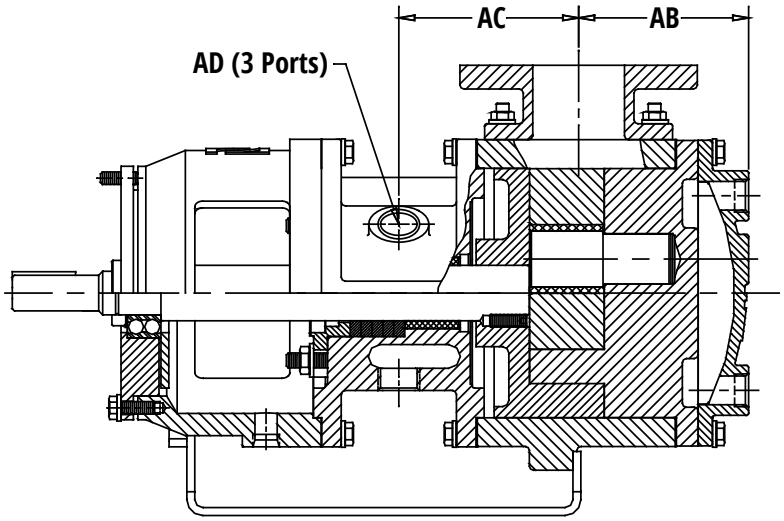


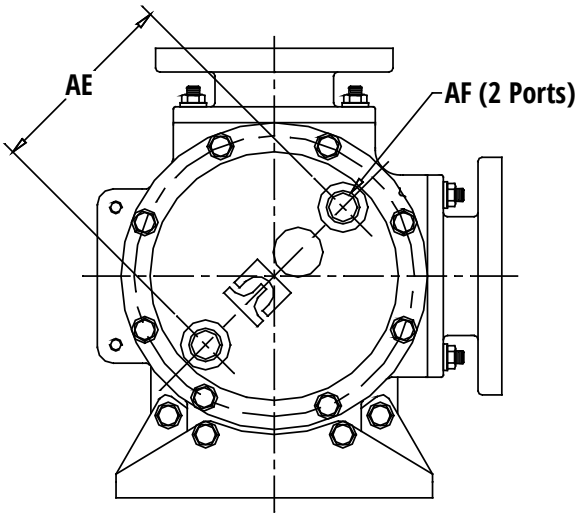


## Dimensions - 90° Ports

| Pump Size | Jacketed Cover | | | | | Jacketed Bracket | | |
|---|---|---|---|---|---|---|---|---|
| | AB | | AE | | AF | AC | | AD |
| | inch | mm | inch | mm | | inch | mm | |
| **GG15/30 IB seal** | 3.67 | 93 | 2.04 | 52 | 1/2" NPT | 3.58 | 91 | 3/8" NPT |
| **GG15/30 OB seal** | 3.67 | 93 | 2.04 | 52 | 1/2" NPT | 2.93 | 74 | One - 3/8" NPT<br>Two - 1/4-18 NPT |
| **GG120/130** | 4.37 | 111 | 4.72 | 120 | 3/4" NPT | 4.93 | 125 | 1" NPT |
| **GG200/210** | 5.31 | 135 | 6.14 | 156 | 3/4" NPT | 5.62 | 143 | 1" NPT |
| **GG250** | 5.31 | 135 | 6.14 | 156 | 3/4" NPT | 5.62 | 143 | 1" NPT |
| **GG550** | 8.49 | 216 | 9.45 | 240 | 3/4" NPT | N/A | N/A | N/A |

| Jacket Ratings | | Steam | Heat Transfer Fluid |
|---|---|---|---|
| **Max Temperature** | **° F** | 365 | 600 |
| | **° C** | 185 | 316 |
| **Max Pressure** | **psig** | 150 | 150 |
| | **bar g** | 10.3 | 10.3 |

**Notes:** Jacketed covers are not available with pumps with relief valves. Brackets also contain additional ports that access the seal chamber. Do not connect them to steam or H.T.F.

## GlobalGear® Jackets Data & Dimensions

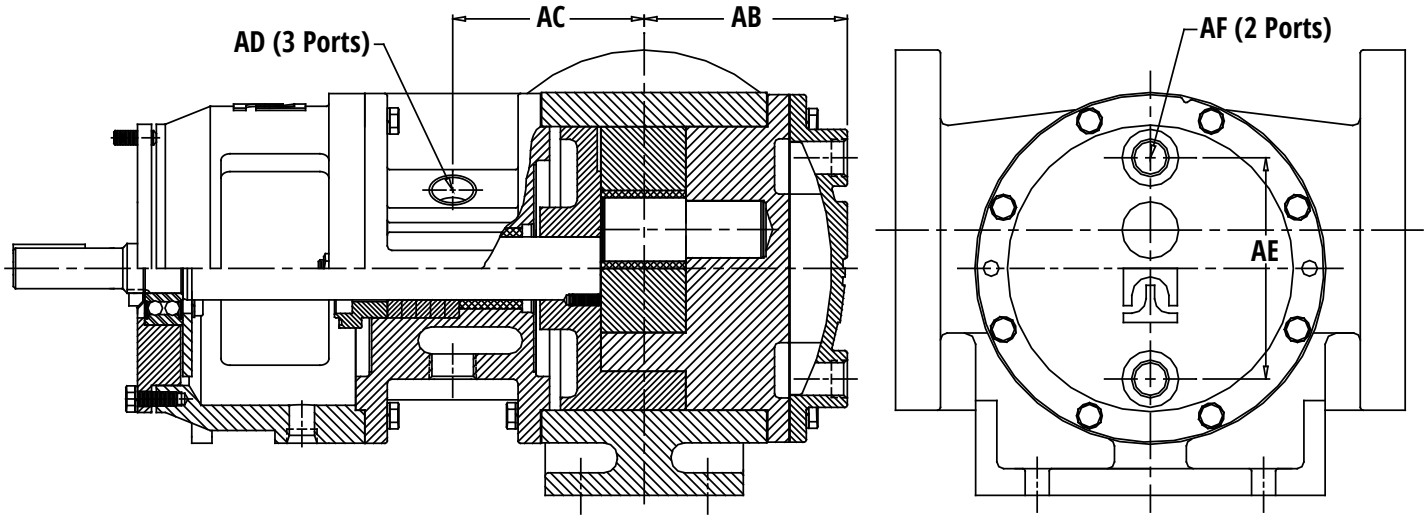


## Dimensions - 180° Ports

| pump size | Jacketed Cover | | | | | Jacketed Bracket | | |
|---|---|---|---|---|---|---|---|---|
| | AB | | AE | | AF | AC | | AD |
| | inch | mm | inch | mm | | inch | mm | |
| **GG15/30 IB seal** | 3.17 | 81 | 2.04 | 52 | 1/2" NPT | 4.08 | 104 | 3/8" NPT |
| **GG15/30 OB seal** | 3.17 | 81 | 2.04 | 52 | 1/2" NPT | 4.08 | 104 | 3/8" NPT |
| **GG120/130** | 4.37 | 111 | 4.72 | 120 | 3/4" NPT | 4.37 | 111 | 1" NPT |
| **GG200/210** | 5.65 | 144 | 6.14 | 156 | 3/4" NPT | 5.33 | 135 | 1" NPT |
| **GG250** | 5.65 | 144 | 6.14 | 156 | 3/4" NPT | 5.33 | 135 | 1" NPT |
| **GG500** | 8.49 | 216 | 9.45 | 240 | 3/4" NPT | N/A | N/A | N/A |

| Jacket Ratings | | Steam | Heat Transfer Fluid |
|---|---|---|---|
| **Max Temperature** | **° F** | 365 | 600 |
| | **° C** | 185 | 316 |
| **Max Pressure** | **psig** | 150 | 150 |
| | **bar g** | 10.3 | 10.3 |

**Notes:** Jacketed covers are not available with pumps with relief valves. Brackets also contain additional ports that access the seal chamber. Do not connect them to steam or H.T.F.

## GlobalGear® NPSH Data

### NPSHr for up to 750 ssu (Feet of Water)

| Size | 150 rpm | 250 rpm | 350 rpm | 450 rpm | 550 rpm | 750 rpm | 950 rpm | 1150 rpm | 1450 rpm | 1750 rpm |
|---|---|---|---|---|---|---|---|---|---|---|
| GG015 | 1.4 | 1.6 | 1.8 | 2.1 | 2.4 | 3.0 | 4.5 | 6.2 | 8.6 | 11.3 |
| GG030 | 1.4 | 1.6 | 1.8 | 2.1 | 2.4 | 3.0 | 4.5 | 6.2 | 8.6 | 11.3 |
| GG050 | 1.5 | 1.8 | 2.2 | 2.7 | 3.4 | 5.2 | 7.7 | 11.2 | 15.0 | |
| GG070 | 1.5 | 1.8 | 2.2 | 2.7 | 3.4 | 5.2 | 7.7 | 11.2 | 15.0 | |
| GG080 | 1.5 | 1.8 | 2.2 | 2.7 | 3.4 | 5.2 | 7.7 | 11.2 | 15.0 | |
| GG090 | 1.5 | 1.8 | 2.2 | 2.7 | 3.4 | 5.2 | 7.7 | 11.2 | 15.0 | |
| GG120 | 1.6 | 1.9 | 2.7 | 3.5 | 4.7 | 7.7 | 11.7 | 16.4 | | |
| GG130 | 1.6 | 1.9 | 2.7 | 3.5 | 4.7 | 7.7 | 11.7 | | | |
| GG200 | 1.8 | 2.4 | 3.6 | 4.8 | 6.9 | 11.9 | 17.4 | | | |
| GG210 | 1.8 | 2.4 | 3.6 | 4.8 | 6.9 | 11.9 | | | | |
| GG250 | 1.8 | 2.4 | 3.6 | 4.8 | 6.9 | 11.9 | | | | |
| GG550 | 3.4 | 6.2 | 10.5 | 15.8 | 24.0 | | | | | |

### NPSHr for up to 165 cst. (Meters of Water)

| Size | 150 rpm | 250 rpm | 350 rpm | 450 rpm | 550 rpm | 750 rpm | 950 rpm | 1150 rpm | 1450 rpm | 1750 rpm |
|---|---|---|---|---|---|---|---|---|---|---|
| GG015 | 0.4 | 0.5 | 0.5 | 0.6 | 0.7 | 0.9 | 1.4 | 1.9 | 2.6 | 3.4 |
| GG030 | 0.4 | 0.5 | 0.5 | 0.6 | 0.7 | 0.9 | 1.4 | 1.9 | 2.6 | 3.4 |
| GG050 | 0.5 | 0.5 | 0.7 | 0.8 | 1.0 | 1.6 | 2.3 | 3.4 | 4.6 | |
| GG070 | 0.5 | 0.5 | 0.7 | 0.8 | 1.0 | 1.6 | 2.3 | 3.4 | 4.6 | |
| GG080 | 0.5 | 0.5 | 0.7 | 0.8 | 1.0 | 1.6 | 2.3 | 3.4 | 4.6 | |
| GG090 | 0.5 | 0.5 | 0.7 | 0.8 | 1.0 | 1.6 | 2.3 | 3.4 | 4.6 | |
| GG120 | 0.5 | 0.6 | 0.8 | 1.1 | 1.4 | 2.3 | 3.6 | 5.0 | | |
| GG130 | 0.5 | 0.6 | 0.8 | 1.1 | 1.4 | 2.3 | 3.6 | | | |
| GG200 | 0.5 | 0.7 | 1.1 | 1.5 | 2.1 | 3.6 | 5.3 | | | |
| GG210 | 0.5 | 0.7 | 1.1 | 1.5 | 2.1 | 3.6 | | | | |
| GG250 | 0.5 | 0.7 | 1.1 | 1.5 | 2.1 | 3.6 | | | | |
| GG550 | 1.0 | 1.9 | 3.2 | 4.8 | 7.3 | | | | | |

### High Viscosity Correction Factors

| Viscosity | CF | Viscosity | CF | Viscosity | CF |
|---|---|---|---|---|---|
| 2500 ssu / 550 cst | 1.3 | 25,000 ssu / 5500 cst | 2.7 | 250,000 ssu / 55,000 cst | 5.3 |
| 5000 ssu / 1100 cst | 1.7 | 50,000 ssu / 11,000 cst | 3.1 | 500,000 ssu / 110,000 cst | 6.7 |
| 10,000 ssu / 2200 cst | 2.0 | 100,000 ssu / 22,000 cst | 4.0 | 1,000,000 ssu / 220,000 cst | 10.7 |

**Notes:** For viscosity above 750 ssu (165 cst), multiply the charted NPSHr value by the appropriate correction factor. NPSHa (available) must be greater than NPSHr (required) for proper pump operation. Data shown here is for pumps with standard ports. Optional ports of different sizes may affect NPSHr.

## GlobalGear® Flange Ratings (Cast Iron)

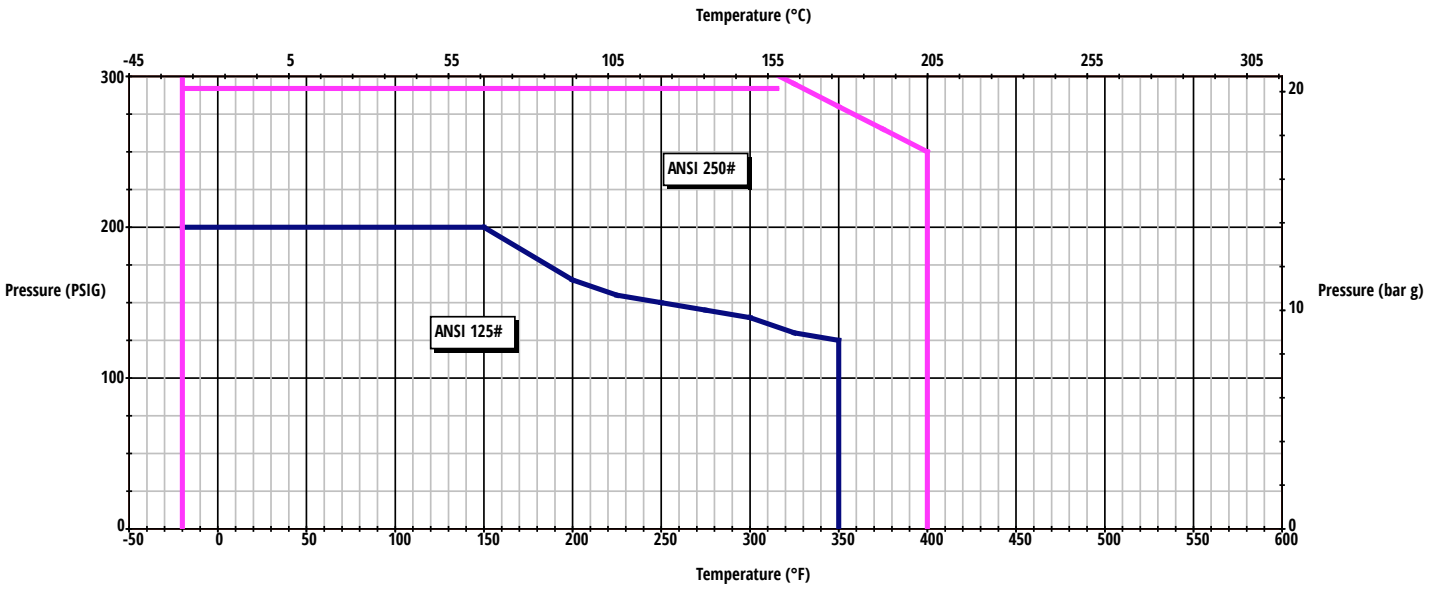


**Note:** These charts show the ratings for flanges only - the maximum pump operating conditions must also be checked. Consult the appropriate Tuthill catalog for maximum allowable operating pressures and temperatures, based on pump application conditions and pump features. These ratings are based on non-shock pressures. ANSI data is from ASME/ANSI B16.1 - 1989 (class A). Consult this spec for more information. ISO data is from ISO 7005-2 : 1988 (gray iron). Consult this spec for more information.

## GlobalGear® Flange Ratings (Stainless Steel)

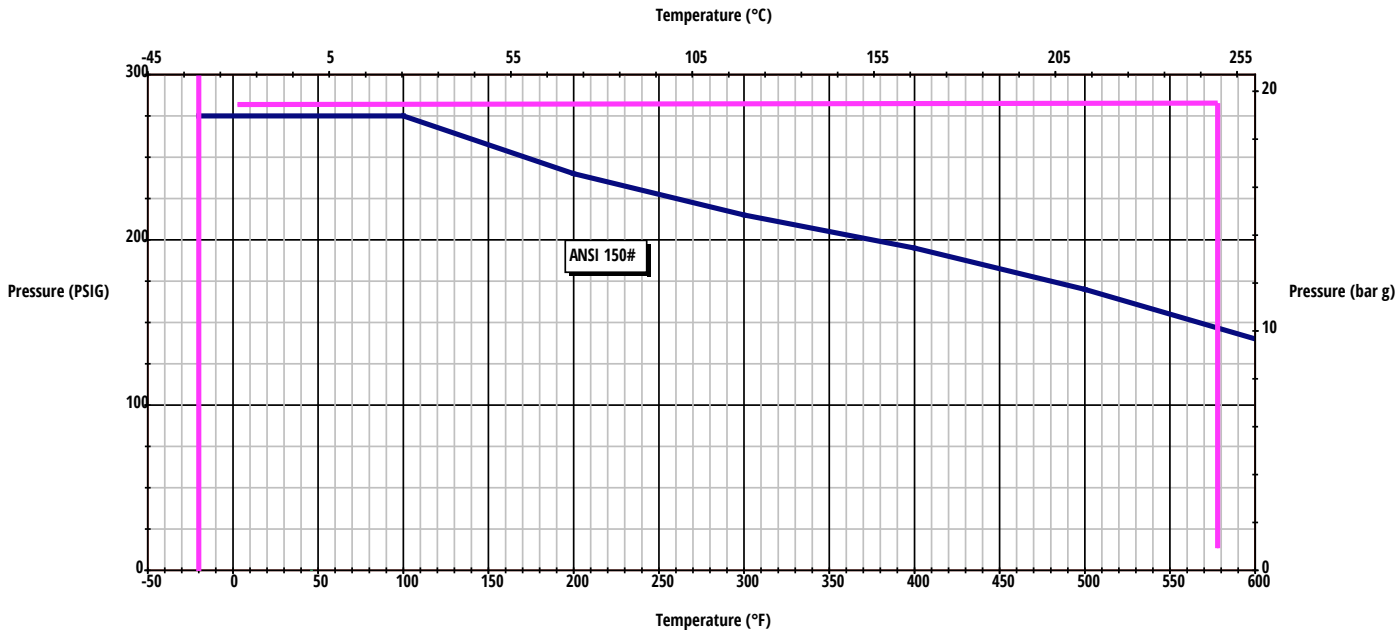


**Note:** These charts show the ratings for flanges only - the maximum pump operating conditions must also be checked. Consult the appropriate Tuthill catalog for maximum allowable operating pressures and temperatures, based on pump application conditions and pump features. These ratings are based on non-shock pressures. ANSI data is from ASME/ANSI B16.5 - 1988 (matl group 2.2). Consult this spec for more information. ISO data is from ISO 7005-1 : 1992 (matl group 13E0). Consult this spec for more information.

## GG Series Pumps Nozzle Loading Data

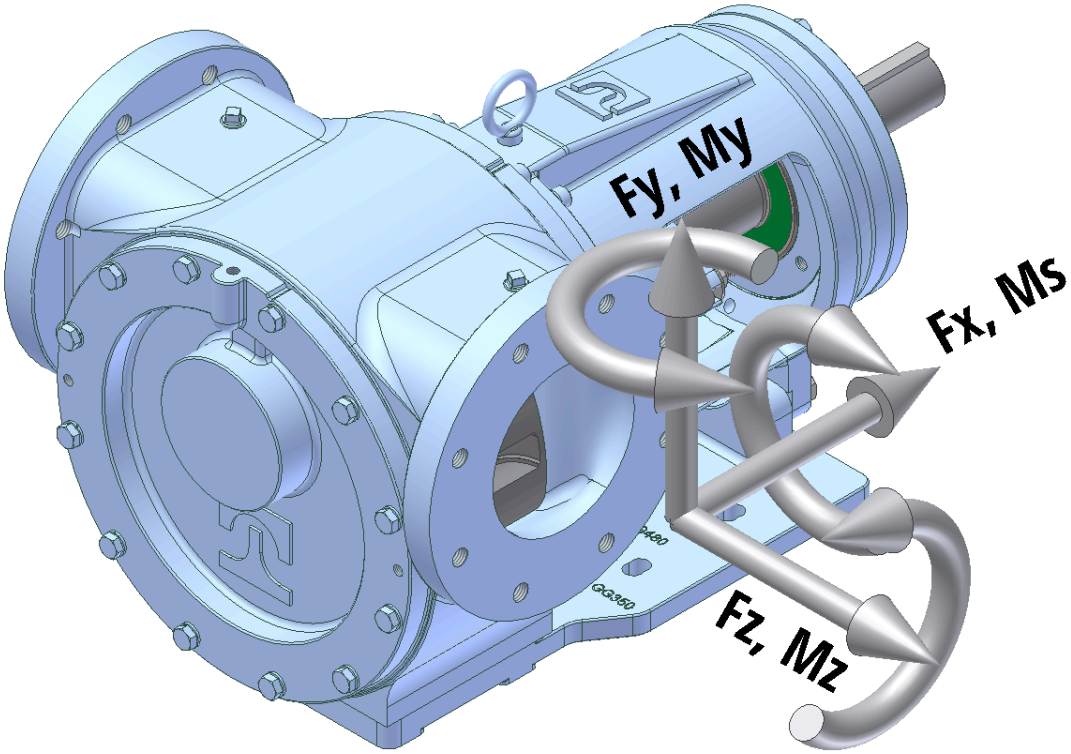


| | Nominal Port Size | | Max. Fx, Fy & Fz | | Max. Mx, My, & Mz | |
|---|---|---|---|---|---|---|
| **Pump Size** | **Inch** | **mm** | **Lbs.** | **N** | **Lb-ft.** | **N-m** |
| GG015-030 | 1.5 | 40 | 113 | 500 | 188 | 255 |
| | 2 | 50 | 150 | 667 | 250 | 339 |
| GG050-070 | 2 | 50 | 150 | 667 | 250 | 339 |
| GG080-090 | 2 | 50 | 150 | 667 | 250 | 339 |
| | 3 | 80 | 225 | 1001 | 375 | 508 |
| GG120-130 | 2 | 50 | 150 | 667 | 250 | 339 |
| | 2.5 | 65 | 150 | 667 | 312 | 424 |
| | 3 | 80 | 225 | 1001 | 375 | 508 |
| | 4 | 100 | 300 | 1334 | 500 | 678 |
| GG200-210-250 | 2 | 50 | 150 | 667 | 250 | 339 |
| | 2.5 | 65 | 150 | 667 | 312 | 424 |
| | 3 | 80 | 225 | 1001 | 375 | 508 |
| | 4 | 100 | 300 | 1334 | 500 | 678 |
| GG550 | 6 | 150 | 450 | 2002 | 750 | 1017 |

**Notes:** We always recommend proper pipe support. Hydraulic Institute standards state, "... both suction and discharge piping should be independently supported near the pump so that when the flange bolts are tightened, no strain will be transmitted to the pump casing." For GG Iron Series, multiply the above values by 0.35. These maximum values are not valid for combined forces and moments.