COTTO

XỊT VỆ SINH CT981BR#CR(HM)

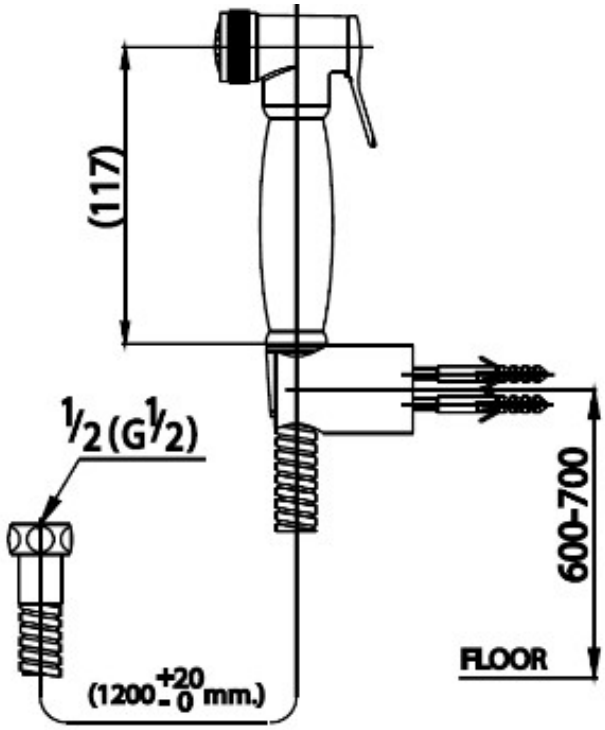

eHOME ., jsc
Đồ Đẹp Nhà Sang
beautiful things for beautiful houses
Showroom COTTO : 18A Ngo Tat To St, Van Mieu - Cat Linh, Ha noi
Head Office : 18A Ngo Tat To St, Van Mieu - Cat Linh, Ha noi
HCM Branch Office : 11E411 Sky 3 Phu My Hung, Quan 7, Ho Chi Minh

Hotline : +84 24 3990 1495
Tel : +84 24 3766 6909
Email : sales@ehome.vn
Website : www.ehome.vn / www.cotto.vn

Warehouse: 288 Giai Phong, Ha noi

Distributors in Vietnam for :

SCG COTTO